HYDRAULIC SHEAR

C3006CNC

NS: 2023-175

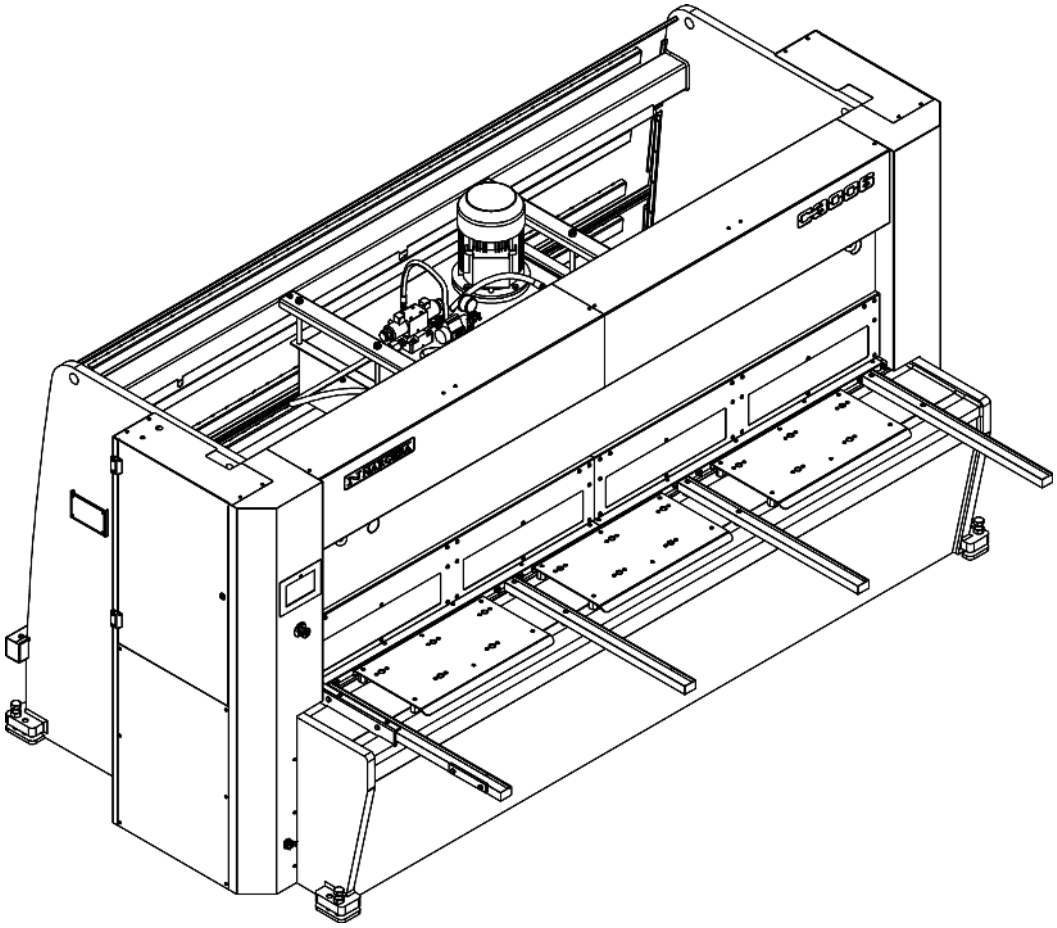

INSTRUCTIONS BOOK

PRADA NARGESA, S.L

Ctra. de Garrigàs a Sant Miquel s/n · 17476 Palau de Santa Eulàlia (Girona) SPAIN

Tel. +34 972568085 · nargesa@nargesa.com · www.nargesa.com

NARGESA CLIENTS

Prada Nargesa has more tan 8.000 customers around the world. Some of our clients, those who offer service to third parties with the Nargesa machinery in their workshops, have been pleased to be part of this network that aims to connect them with posible future clients. In this way, all those people or companies that have a need for any part or tool that can be manufactured by using the Nargesa range of machinery, will be able to find a solution in their área to be able to satisfy their production requirements by hiring their services.

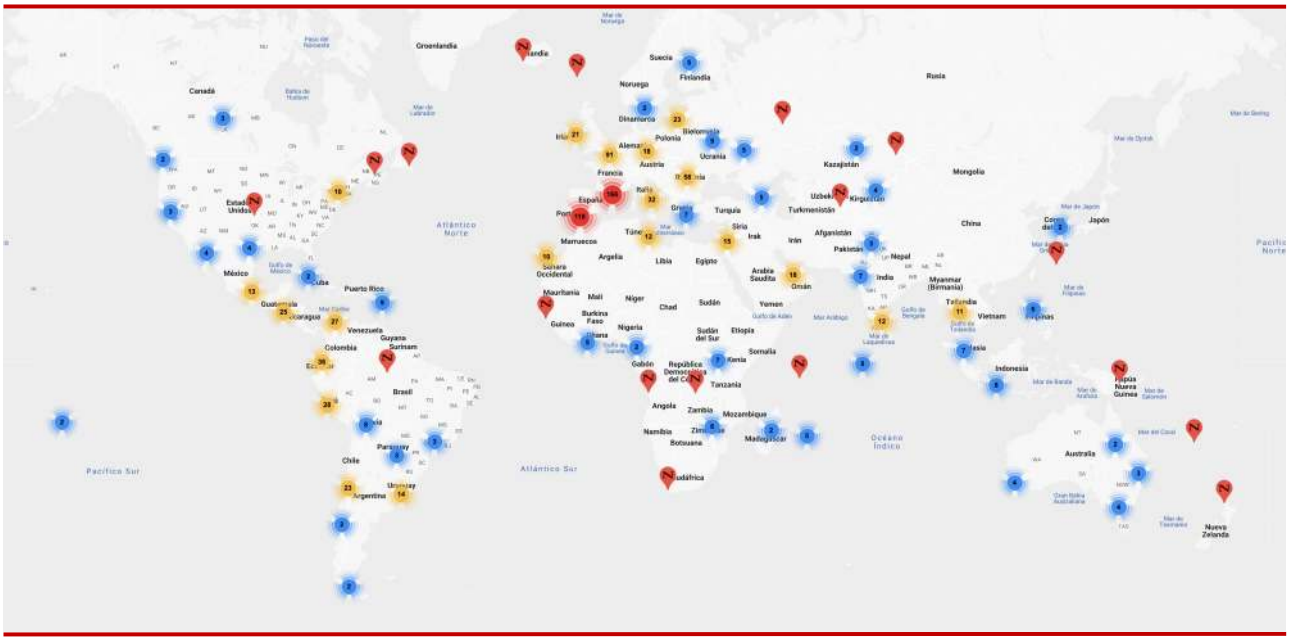

We have more than 8.500 customers in 150 different countries around the world

Discover its location on the interactive map on our website!

DO YOU WANT TO PARTICIPATE?

Send an email to nargesa@nargesa.com, include the following information and we will add you to this list.

We want to encourage all those who haven't participated yet in this great comercial network!

1. Company name
2. CIF/Tax Code
3. City
4. Country
5. Machine or machines

PRADA NARGESA

Prada Nargesa S.L. is a family business fonuded in 1970 located near Barcelona, Spain, with more tan 50 years of experience in the sector of manufacturing of industrial machinery, and more tan 10.000m² of facilities. Nargesa is a symbol of quality, reliability, warranty and innovation.

Our whole range of machines and accessories is manufactured entirely in Nargesa. We have a constant stock of 400 machines, and we have more tan 16.800 machines sold all over the world.

OUR RANGE OF MACHINERY

Ironworker Machines

Ring Roller Bender and Pipe Bender

Non-mandrel Tube and Pipe Bender

Twisting / Scroll Bending Machines

Horizontal Press Brakes

End Wrought Iron Machines

Gas Forges

Iron Embossing Machines

Hydraulic Shear Machines

Hydraulic Press Brakes

Presses for Locks

Broaching Machines

Power Hammers

CERTIFICATES

Prada Nargesa has several certifications that backup both, the design and manufacturing processes, as well as the journey through exporting our products around the world and the quality of the manufacturing components we use for our machines. These facts turn into real advantages for our customers:

CONCESSION OF AUTHORIZED EXPORTER AUTHORIZATION
ESEAOR23000312

AUTHORIZED EXPORTER

- Faster customs procedures
- Reduction of tariff documentation
- Tariff preferences according to geographical location

PYME INNOVADORA
Válido hasta el 31 de mayo de 2026

INNOVATIVE SME

- Development in innovation, design and manufacturing technologies
- Certification and aduit of efficiency in product and service
- Ability to foresee customer needs

AENOR
R&D&I MANAGEMENT
UNE 166002

R+D+I MANAGEMENT

- Manufacturing based on the R+D+I process
- Technological surveillance system

SUCCESS STORIES

At Prada Nargesa we believe that the testimony of our clients is our best guarantee, and that is why we like to expose some of the success stories that we have witnessed around the world:

Discover its location on the interactive map on our website!

DO YOU WANT TO PARTICIPATE?

Send an email to nargesa@nargesa.com including the following information and we will add you to our website

Company name

Testimonial name

Post in the Company

Country

Descriptive text

Photography with the machine

INDEX

1. CHARACTERISTICS OF THE MACHINE 4
1.1. Identification of the machine 4
1.2. General dimensions 4
1.3. Description of the machine 4
1.4. Identification of the machine 5
1.5. General features 6
1.6. Description of safety devices 7
2. TRANSPORTATION AND STORAGE 8
2.1. Transportation 8
2.2. Storage conditions 8
3. MANINTENANCE 9
3.1. General Maintenance 9
3.1.1. Oil change 9
3.1.2. Lubrication of bolts 10
3.1.3. Lubrication of the guides 10
3.1.4. Lubrication of the gauge spindles 11
4. INSTALACINSTALLMENT AND START UP 12
4.1. Location of the machine 12
4.2. Dimensions and working site 12
4.3. Admissible outer conditions 13
4.4. Connection to power supply 13
5. HANDLING BOOK 14
5.1. Introduction 14
5.2. Control panel 14
5.3. Feeding of the guillotine 15
5.4. Activation of the machine 15
5.5. Gauge retraction 18
5.6. Light 19
5.7. Laser 19
5.8. Calculator 20
5.9. Automatic mode 20
5.10. Program management 22
5.11. Gauge adjustment 24
5.12. Blade adjustment 26
5.13. Lateral length of the cut 27
5.14. General emergency 27
5.15. Photocell interruption 29
5.16. Pump thermal protection 29

5.17. Alarm management 30
5.18. Input/output monitoring 31
5.19. Material management 32
5.20. Import/export parameters, materials and programs 33
5.21. Remote service 34
5.22. Touch screen calibration 36
6. WARNINGS 37
7. THE BLADES 38
8. ACCESSORIES 39

TECHNICAL ANNEXES

1. CHARACTERISTICS OF THE MACHINE

1.1. Identification of the machine

Trademark	Nargesa
Type	Hydraulic shear
Model	C3006

1.2. General dimensions

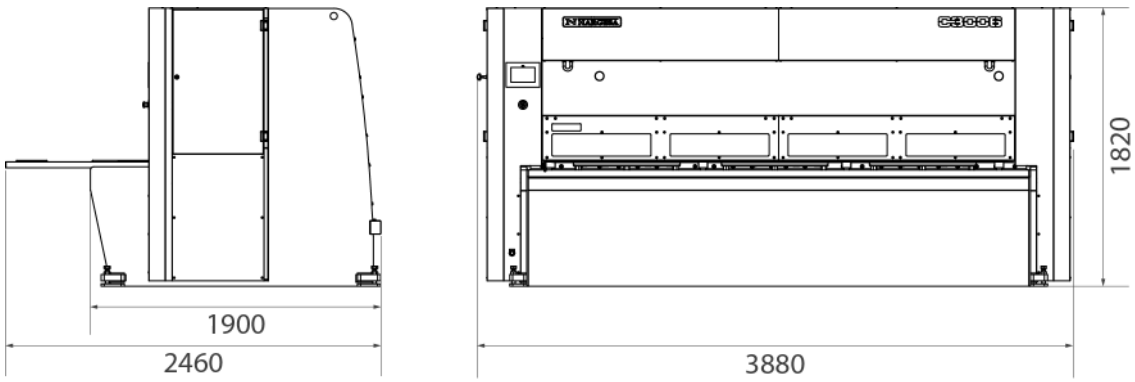

Picture 1. External dimensions of the machine

1.3. Description of the machine

The guillotine C3006, has been designed specifically for cutting metal sheets.
The manufacturer will not take any responsibility for the damages caused to the machines or the operatives using it at any other operation different from the ones previously specified.
The C3006 is according to the European regulations and normative for the manufacturing of machinery.

PRADA NARGESA S. L is not liable for any damage that might occur due to misuse or failure by users to comply with the safety standards.

1.4. Identification of the machine

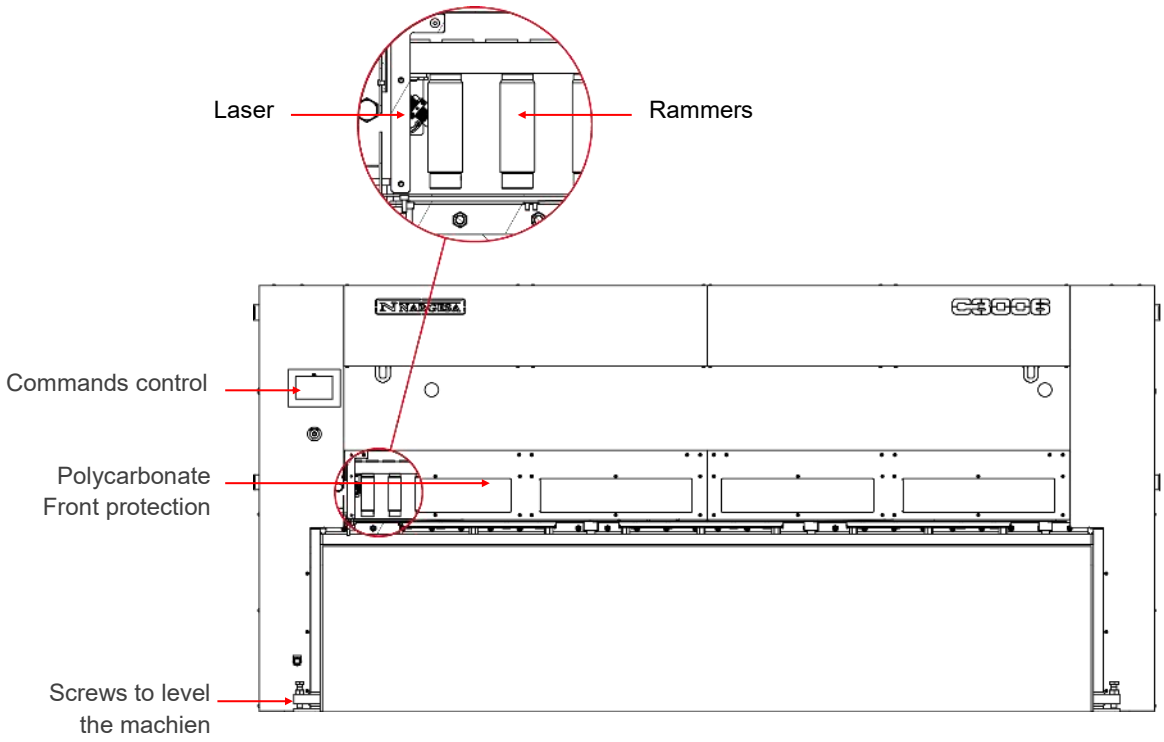

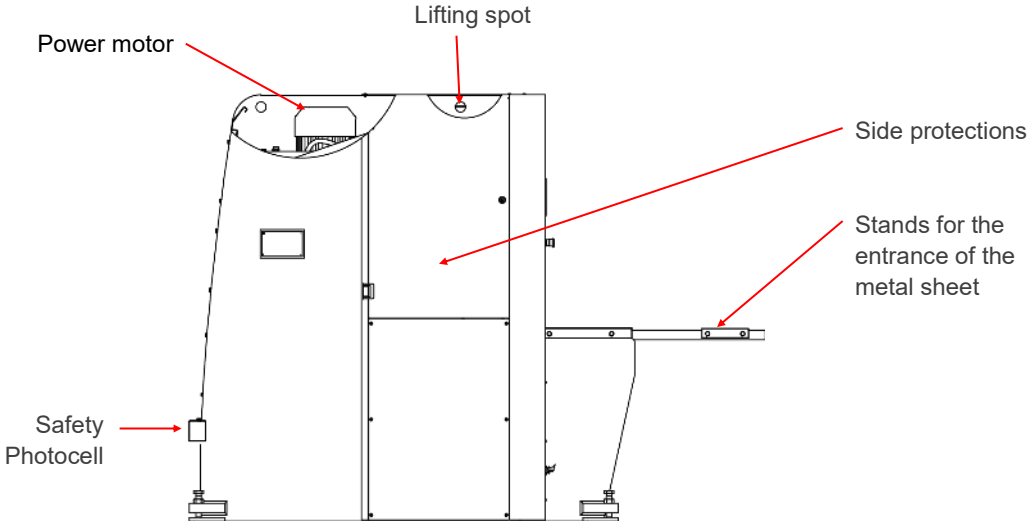

Picture 2. Nameplate

1.5. General features

Engine power	9,6 KW / 12,87CV
Tension	230/400V Three-Phase
Hydraulic pressure	175 Kg/cm^2 (17,2 MPa)
Cutting Capacity: mild steel	6 mm
Cutting capacity: stailess steel	4 mm
Nº of hammers	15 units
Cutting length	3030 mm
Neck	173 mm
Gauge displacement	700 mm
Strokes per minute	12 strokes
Position accuracy and repeatibility	+/- 0,1 mm
Dimensions	3880x2460x1820 mm
Weight	7500 Kg

1.6. Description of safety devices

The fixed safety devices the guillotine C3006 has are lateral to avoid any handling, the front protection avoids from acceding to the rammers side, Protections in the back side of the machine covering the belts and pulley of the back top, the outet ramp for the material and the upper protection cover of the piston moveable part.

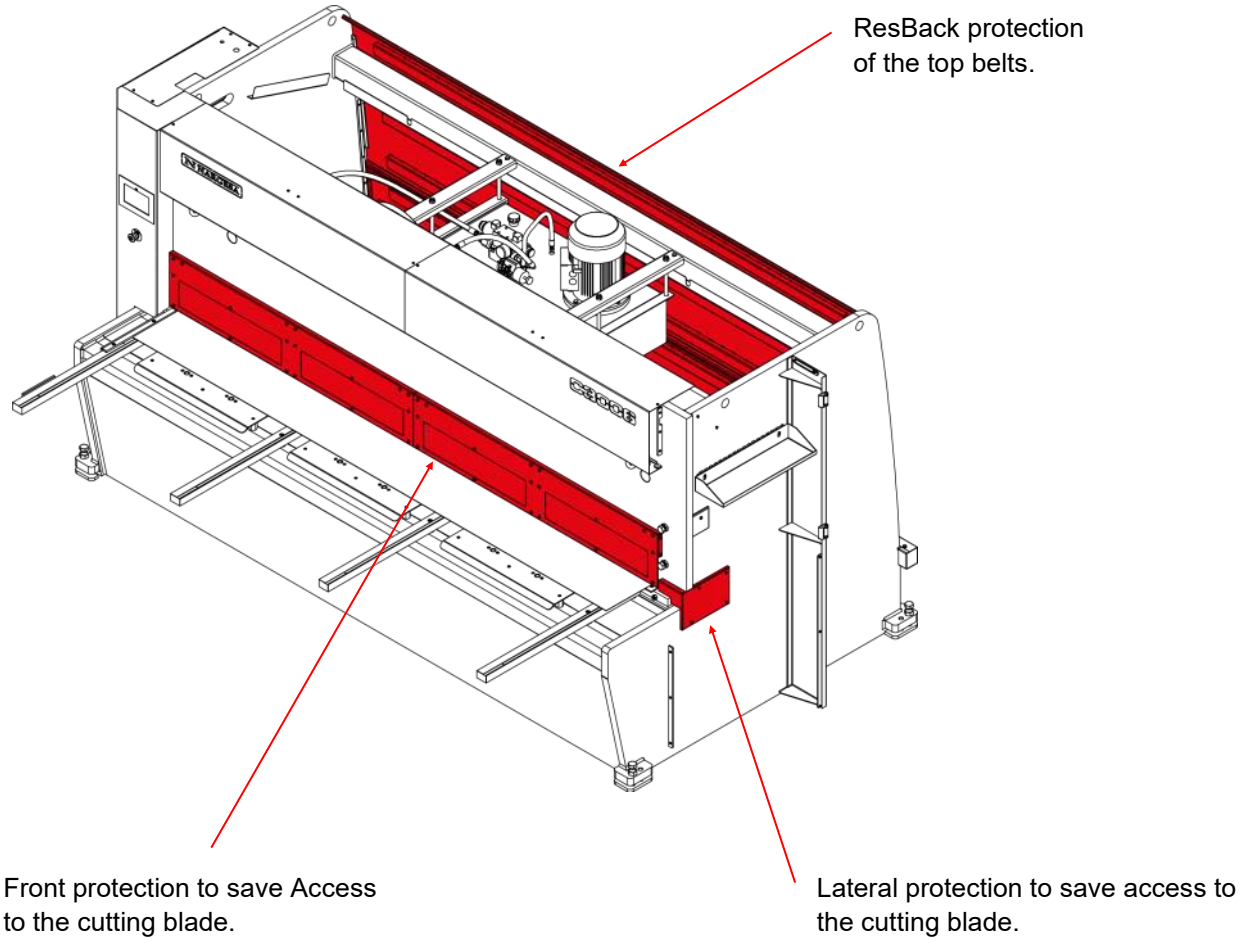

Picture 3. Safety devices

Protection covers must not be removed to do the maintenance works. This job must be carried out by highly qualified technicians. **PRADA NARGESA** will not accept any responsibility for the damages caused by not bearing in mind to what has been previously exposed on this book.

2. TRANSPORTATION AND STORAGE

2.1. Transportation

The lifting of the machine will be carried out by a crane, using the clamping points indicated for that. The machine will be never lifted by any other side but the indicated one.

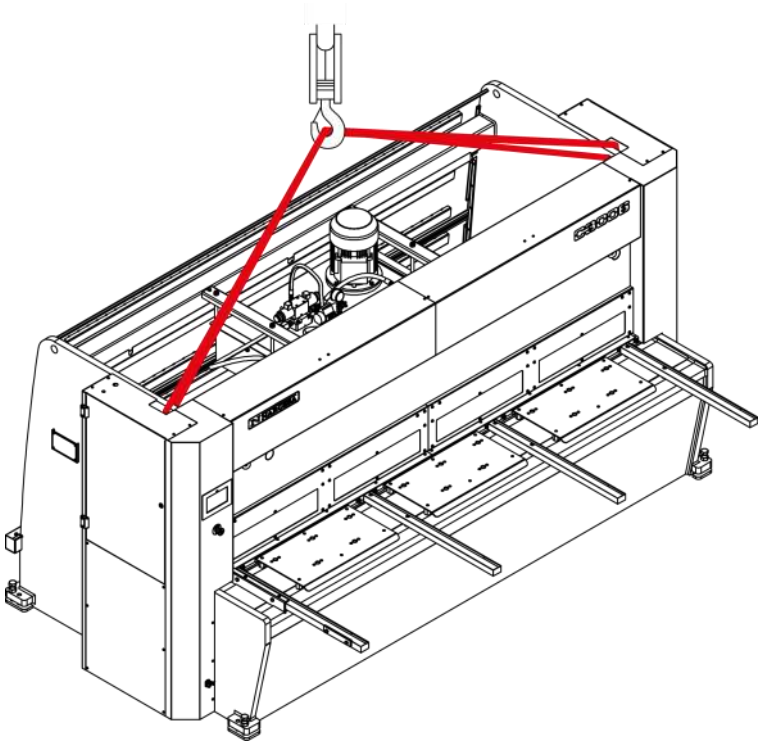

Picture 4. Transportation of the machine

2.2. Storage conditions

The machine will not be stored in a place that hasn't got the following requirements:

* Humidity between 30% and 95% without water condensation.

* Temperature from -25 to 55ºC or 75ºC for a length of time not exceeding 24h (these must be considered storage conditions)

* It is advisable not to pile up machines or heavy objects on top of it

3. MAINTENACNE

3.1. General maintenance

The maintenance of the Shear implies four operations:

- Oil change
- Lubrication of bolts
- Lubrication of the guides
- Lubrication of the gauge spindles

3.1.1. Oil change

The oil container level must be checked every 1000 hours of work.

The oil level sight-glass is located at the side of the tank. If oil needs to be added, fill until the sight-glass is completely full.

Replace the hydraulic oil container every 4000 hours of work or 60 months.

Container capacity: 96 liters.

Oil: CEPSA HYDRAULIC HM 68

WARNING: Stop the machine to make the maintenance.

Once the oil has been changed, it is necessary to start up the machine and activate the pedal in intermittence by increasing the pressure time gradually until the circuit is full.

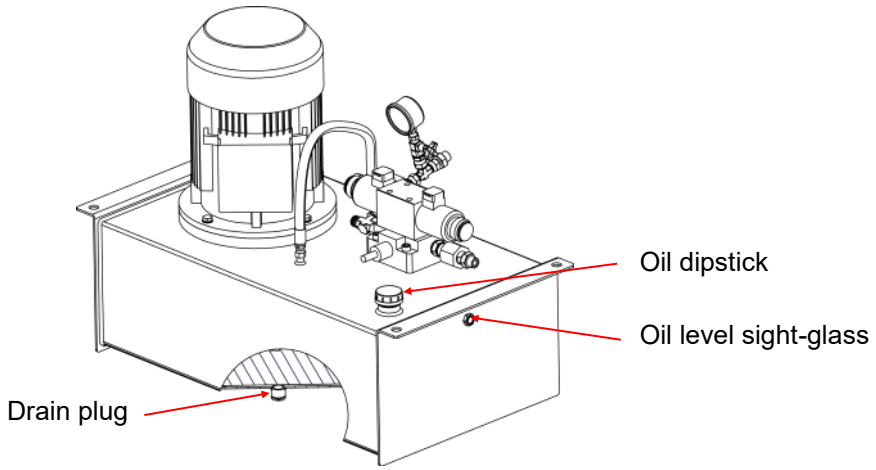

3.1.2. Lubrication of bolts

To carry out the maintenance in the later grease points of the machine, we put the folding group down to its lowest point. **We stop the machine** and proceed to the lubrication in the indicated points.

Grease up the bolts periodically according to the level of use.
If it is a steady and daily use, they must be greased avery month.

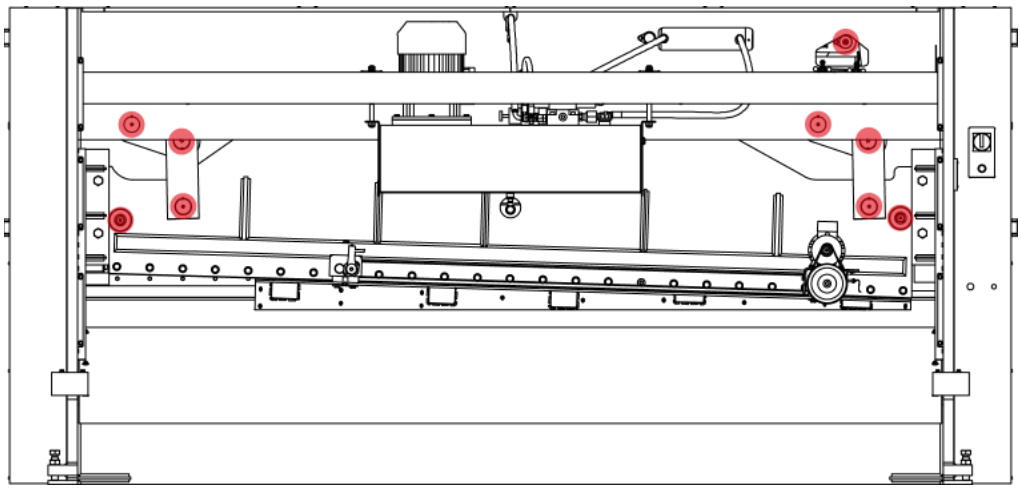

Rear view of the machine

3.1.3. Lubrication of the guides

In order to attain the maintenance in the lateral lubrication points of the machine, we raise the folding group to its highest point. **We stop the machine** and proceed to the lubricate the indicated parts.

Lubricate all guides greasers every month.

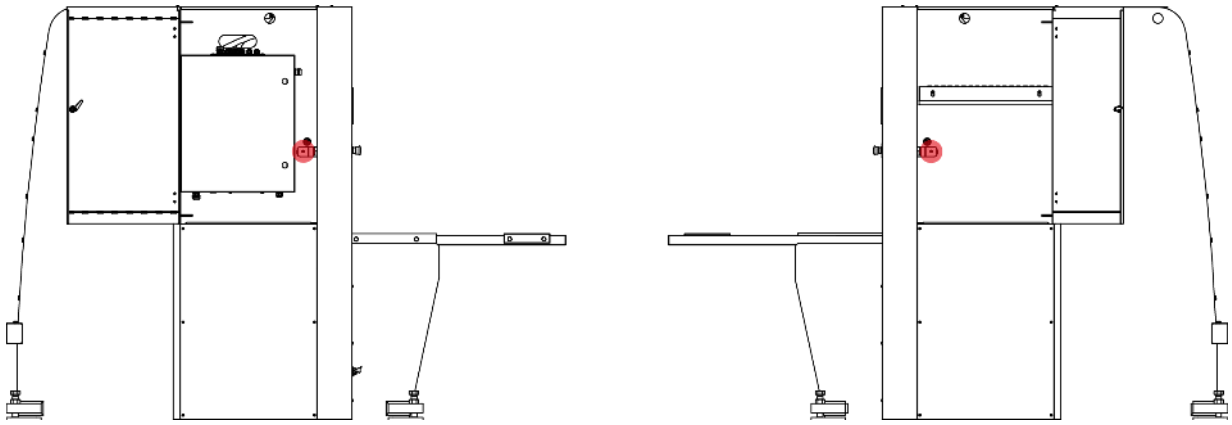

Side view of the machine

3.1.4. Lubrication of the gauge spindles

To lubricate the gauge spindles, we place it in its position farthest from the folding group. **We stop the machine** and proceed to lubricate the 2 spindles and the 2 guides. We put the machine in gear and place the gauge at its minimum height, then move it to its maximum height. Repeat these movements 2 or 3 times, until the grease covers the spindles uniformly.

Lubricate the top spindles weekly with grease or oil.

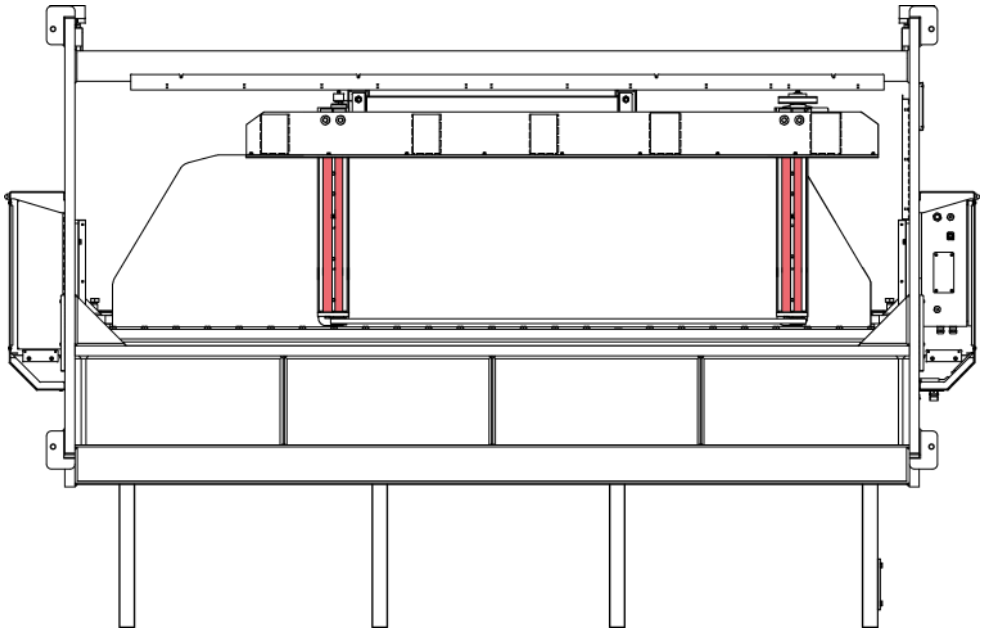

Lower view of the machine

4. INSTALLMENT AND START UP

4.1. Location of the machine

The machine will be placed properly so that it doesn't have to be moved, in case this was not possible then it is necessary to follow the rules described in the Transport section. It muts be placed on a flat and levelled surface to avoid vibrations and any sort of movement while it's performing. It is possible to level the machine by using the screws at the bottom of the machine, at each corner.

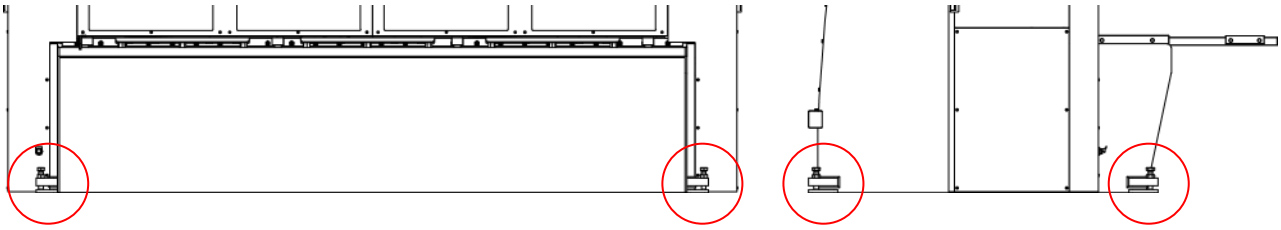

Picture 5. Anchor points of the machine

4.2. Dimensions and working site

The dimensions of the machine are to be considered when the machine is put down, as well as the operative working zone and the possible different sizes of the part to be worked.

The machine will be only used by one operative, who will be located at the front side of the machine and never in a lateral of it since he has to keep control over the whole set of the machine, moreover the main prtection devices are designed for th efrontal use of it.

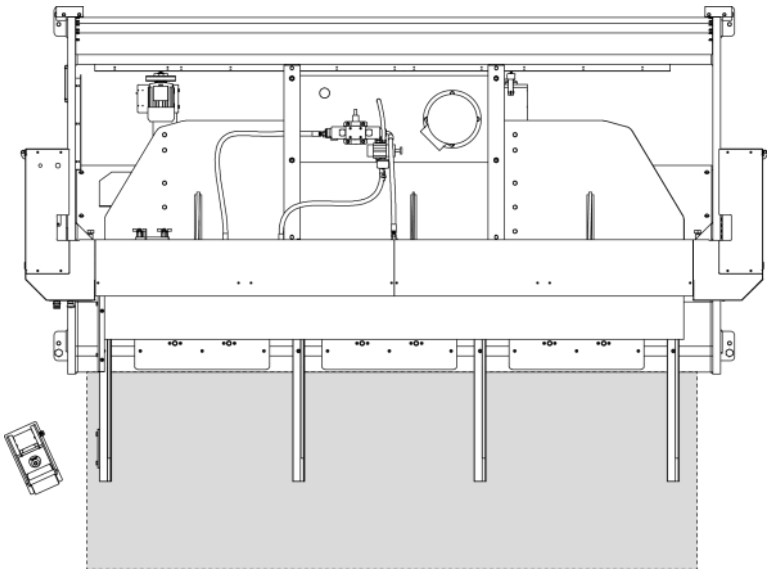

Picture 6. Working site

4.3. Admisible outer conditions

It is advisable to work under the following atmospheric conditions:

- Room temperature between +5 °C and +40 ºC without exceeding an average temperature of +35 °C within 24 hrs
- Humidity between 30% and 90% without water condensation

4.4 Connection to power supply

The C2006 shears are equipped with two three-phase 230/400 V motors: a 0.37 kW motor for the gauge, and a 5.5 kW star-connected motor which requires a single 240V or 400V power supply. If the line voltage is not as indicated, then the motor coil connection and the gauge motor variable frequency drive (VFD) connection shall be changed. The gauge VFD is NOT A MULTI-VOLTAGE VFD, so if the voltage needs to be changed, then the VFD should be replaced accordingly.

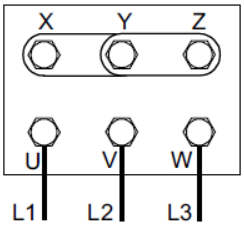

Star figure

(Default)

For voltage 400V

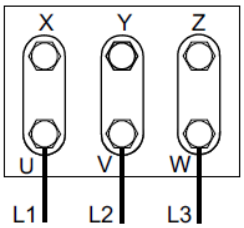

Triangle figure

For voltage 230V

Picture 7. Change of engine connections

IMPORTANT

This machine must be connected to a power supply with ground wire.

5. HANDLING BOOK

5.1. Introduction

This manual is designed for the user of the Guillotine C3006, since it has got important information about the use of it and the peculiar features of the machine. Therefore it is advisable to follow step by step the points detailed in this book so a good understanding of its performance could be achieved.

5.2. Control panel

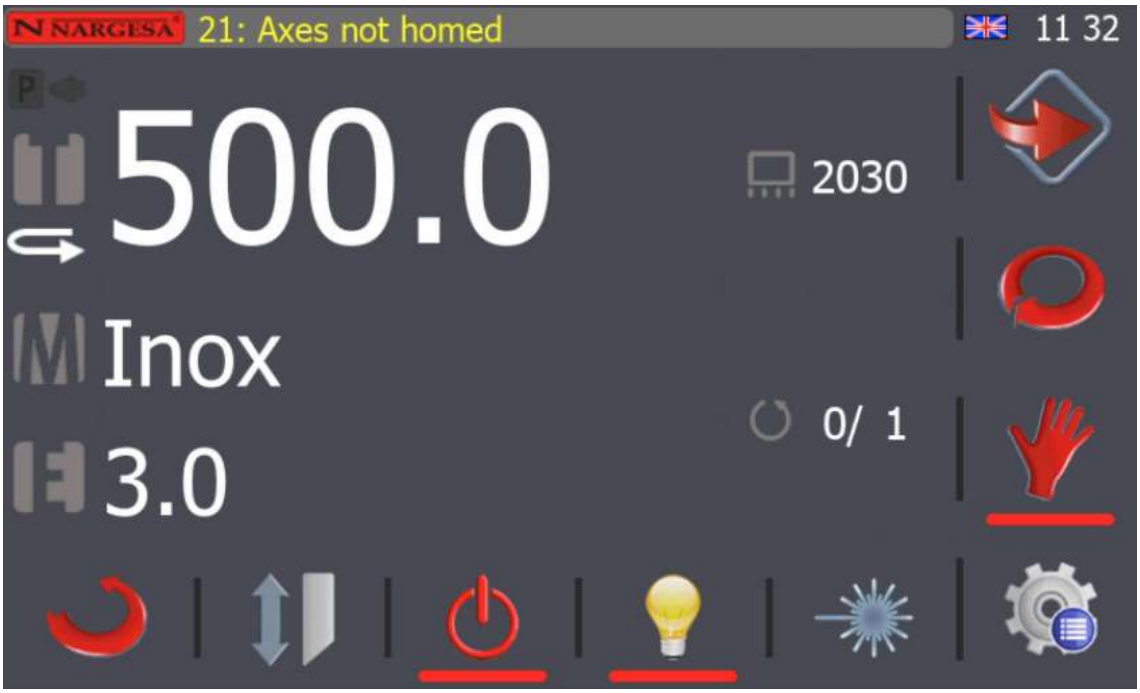

5.3. Feeding of the guillotine

In order to power on the machine, it is enough jus by set the Go switch in the position o Connected. Then it will show up al abel on screen as the one below:

Picture 8. Message of activation of the machine

Right now the machine is in a StandBy mode, it happens when it is activated but in rest position awaiting any command the user orders.

5.4. Activating the machine

Press the reset button located in the electrical panel. This reset button must be pressed each time the machine is turned on, and after an emergency stop has been initiated by the photocell or by the emergency stop button.

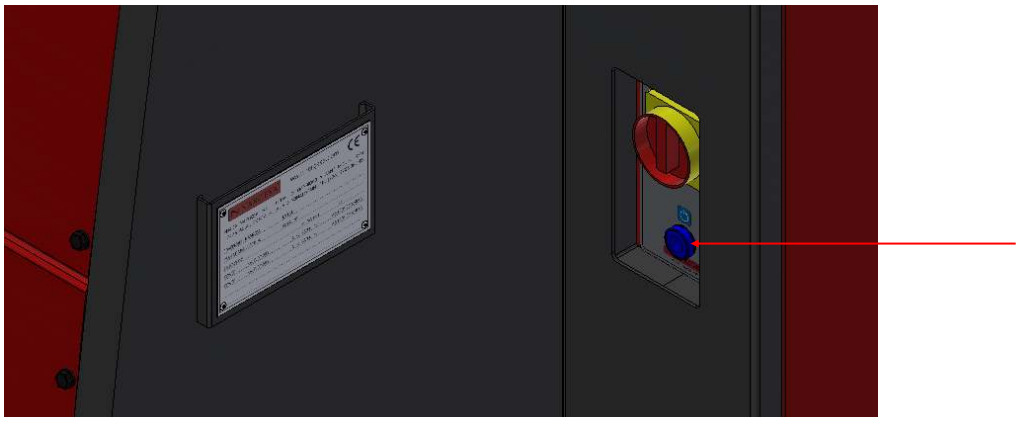

Once the shears have started up and are in Stand-by mode, they are activated following the steps below in order to start operations.

To proceed properly press . If the power source has recently been connected, the X and Y axes need to be synchronised by pressing .

The machine will automatically synchronise the axes, after which the previous message disappears and the following is displayed:

The following message will appear once the Homing cycle has finalised.

Cuts can be done manually from this point on by simply entering the information on the required cut. To input the cut measurements, press the corresponding button and the following screen will appear.

Enter the gauge dimensions required using the number keys and then press SET . Next, follow the same procedure to enter the cut length, material and thickness data and press . The machine will then position the X-axis at the required location and the following screen will appear.

The operational system (continuous or single) can also be selected during the manual mode, as can be observed in the previous image. The manual mode is selected by default.

The mode can be changed simply by pressing

The single operational mode works in the following way:

The blade is lowered while the operator presses down on the pedal. If the pedal is released, the blade reverses and is raised until it reaches the upper rest position.

To cut a sheet in this operational mode, the pedal is pressed down until the blade moves to the lowest position of the vertical cut. Once in this position, the sheet has been cut and the blade has reached the base. However, the blade will not be raised until the operator releases the pedal. If the operator releases the pedal, the blade will move vertically until it reaches the upper rest position.

The continuous operational mode works in the following way:
The pedal can be pressed and released in this operational mode. Once the pedal is pressed, the blade moves to the lower vertical position, cutting the sheet. It is then raised automatically until it reaches the upper rest position. The blade will stay in this position until the pedal is pressed again. If various cuts need to be made at the same position, simply press the pedal and keep it pressed as long as required. In this case, the cuts will be made sequentially, and the operator simply enters the sheets to be cut into the machine.
The cut counter will increase by one each time the pedal is pressed, or each time the shear blade makes a cut and returns to the upper position if operating in continuous mode.

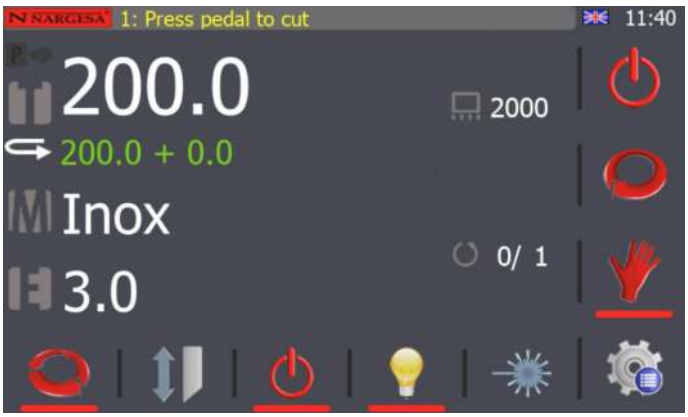

5.5. Gauge retraction

The gauge retraction is mainly used to prevent the sheets from being damaged when they are cut. This function can be activated by pressing . The image will change to white, indicating that the function has been enabled. The function is disabled by pressing (X) again, and the image will go back to being transparent.

Once activated, the machine will behave as follows:
After entering all the cut data and activating this function.

The gauge retraction can be enabled in both single and continuous mode.

The hold-down plates are lowered by pressing the machine pedal. Once the sheet is fixed in place between the hold-down plates and the machine table, the gauge will retract a few millimetres. Next, the blade is lowered and cuts the sheet. In this way the sheet is not subjected to unnecessary friction during the cutting operations and the sheet can be released so it can fall to the extraction ramp by gravity. Once the cut has been made, the machine will order the blade and the hold-down plates to be raised. Once the blade is in the rest position, the gauge will automatically return to the programmed position.

This function can be enabled or disabled in both the manual (single and continuous) and automatic modes.

5.6. Light

The cutting area has an LED light to significantly improve visibility when operating the machine.

Press the button to turn it on.

The light bulb icon is activated when doing so, as shown in the following screen shot.

Press the button to turn the light off.

5.7. Laser

The laser line is activated by pressing . The laser light is turned on and generates a laser cutting line. The laser is very useful for cutting parts that are not square, or when making cuts that do not reach the end position.

Press the button to turn the laser off.

5.8. Calculator

The calculator tool is very useful when complex calculations need to be done that can affect the sheet cutting dimensions for example. Press the Calc button to activate it.

Once the required calculations have been done, the resulting value can be confirmed as the new cutting dimension by pressing the SET key.

The result is now displayed on the main operating screen.

5.9. Automatic mode

Press the key that appears on the screen to active automatic mode. On doing so, the information displayed on the screen changes.

Automatic mode is similar to manual mode, with the option of specifying various operational steps with different cut dimensions. These specifications are saved within a program.

A program only contains one step by default when it is created, but more steps can be added by selecting the following tab:

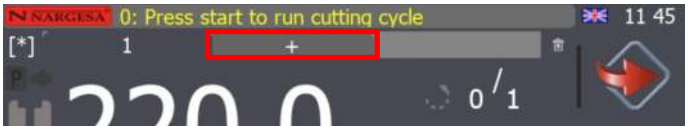

By doing so a screen appears with a new step and a new cut dimension (0.0 by default) which can be modified and set to the desired value. An example is displayed in the following figure:

Follow the same procedure to add more steps.

To remove a step, first select it by clicking on the corresponding tab. Then press the icon which is displayed in the top right corner of the window. The information on the screen changes to the following:

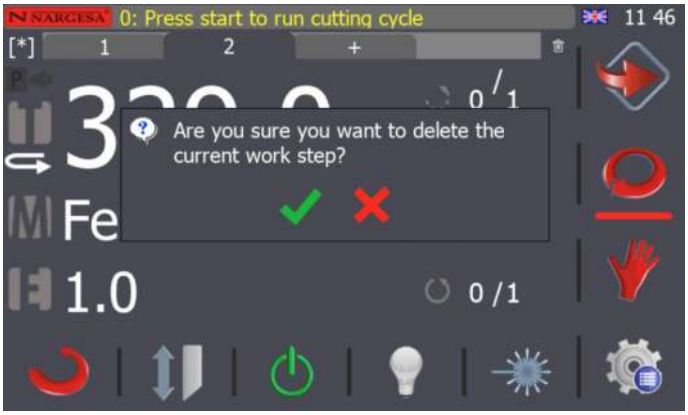

Confirm the command to delete the current step by pressing ✔ or cancel the operation by pressing ✘

If we want to do several cuts with the same dimensions, then we can specify the number of repetitions required instead of creating several successive steps with the same dimensions. To do so, press

0 / 1 and specify the number of repetitions for the current step.

We can also specify the number of repetitions for the current program. To do so press

0 / 1 and specify the number of repetitions for the program.

Once we are satisfied with the program created, it needs to be saved. To do so, press [*] and the on-screen keyboard appears, as shown below

Enter the program number and press the Enter button to confirm.

We can now operate in automatic mode with the program created beforehand. The hydraulic pump needs to be activated in order to do so, by pressing the button. Then start the cycle by placing the gauge at the cut dimension defined for the current step. This is done by pressing the button. When the gauge is in position, press the cutting pedal as instructed on screen. The machine will start to do the first 500 mm cut as specified in step 1. Then it will move on to step 2. After pressing down the pedal it will make the specified cuts and continue the sequence up to the end of the program. A message will then appear on the screen noting that the part has been finished.

5.10. Program management

Numerical control of the shears allows multiple programs to be defined which can be used in automatic mode. These programs are saved in the memory and can be loaded, changed and deleted when required.

Press the button to access the program management screen. The shear menu screen appears when doing so.

The program management menu is selected by pressing the button. The following window will appear:

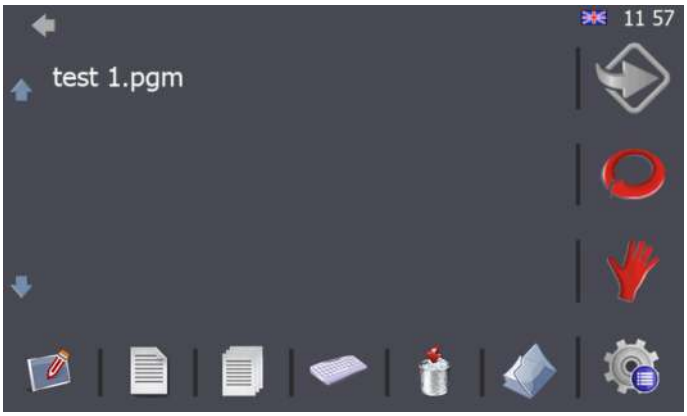

The information is displayed as a list of existing programs (use the and arrows to navigate through the list), and management icons which are located at the bottom of the screen. The corresponding functions are described below.

Create a new program.

Edit the selected program.

Create a copy of the selected program and save it with a different file name.

Rename the selected program.

Delete the selected program.

When it has been activated, the system operates using folders, not programs.

5.11. Gauge adjustment

The shear gauge is adjusted perfectly at the factory. However, over it time the gauge may need to be re-adjusted. This happens when there is a difference between the size of the part created and the specified cut dimensions.

Press the button to adjust the gauge. A menu window appears on the screen with the following diagram.

Now press the button to access the gauge management window which is shown below.

We should select the following icon from those displayed at the bottom of the screen.

On doing so, the information displayed on the screen changes to the following.

At this point, enter a value for the cut dimension that can be measured easily. 100 mm is a good option for example. Then, press the button to position the gauge at the specified location.

Next, use vernier callipers or a screw gauge to check that the distance between the gauge and the cut line marked out by the laser beam is 100 mm (or the value that was entered in the previous step).

If the measured distance is greater than the specified level, then this difference should be added to the gauge “Zero Position”. If the distance is less than the specified level, then the difference should be subtracted.

For example, if we have specified a cut level of 100 mm and the actual measurement is 102.4 mm, 2.4 mm should be added to the gauge “Zero Position”. If, however the actual distance measured is 99.3 mm, subtract 0.7 mm from the gauge “Zero Position”.

This information can then be used to correct the gauge “Zero Position”. To do so, press the button again and when the menu window appears, press .

The window displayed is as follows:

Select the “Axes” option from this window. Once selected, look for the line displayed below.

BG7.2	Zero position	722.6	mm

Select the level that has been set as the homing cycle zero position and add or subtract the difference obtained in the previous step. In this case the resulting level is that displayed below.

Repeat the same process to check that the new zero-gauge position is correct.

5.12. Blade adjustment

The blades are adjusted perfectly at the factory; however, they may need to be replaced after numerous cutting operations due to wear. In order to ensure efficient cutting, the blades must be adjusted accordingly once they have been changed. Follow the procedure detailed in the corresponding section to do so, after enabling the blade adjustment mode.

During this operating mode, the upper blade is lowered when the pedal is pressed. When the pedal is released, the blade stays in the same position. The pedal can therefore be used to lower the upper blade in a controlled way, and it can be adjusted as required once in position.

The blade adjustment mode can be accessed from both the manual and automatic operating modes. To do so, press the button. On doing so, the icon changes to , indicating that the machine is in the blade adjustment mode.

Once the blades have been adjusted, press the button again to disable the blade adjustment mode and return to the standard operating mode .

Note that on doing so, the shears automatically return to the previous position by raising the upper blade up to the maximum machine opening position.

5.13. Lateral length of the cut

The maximum lateral length of a cut to be made on a sheet is specified at the factory and cannot be changed, as this parameter is implicitly related to the machine structure and dimensions. However, the width or lateral length of a cut can be specified within these minimum and maximum levels.

This parameter can be changed in both manual and automatic operating modes and is identified with the icon. Press the numerical value displayed on the right and the following window will appear:

Now enter a new width value for the side of the sheet, between the minimum of 0 and the maximum lateral measurement specified at the factory.

By changing this value, the upper shear blade will only be lowered to the position required to cut the sheet at the specified width, thereby reducing the vertical displacement of the machine to the minimum amount required.

The advantage of this is that it reduces the time to make each of the sheet cuts, optimising the operations in an efficient way.

5.14. General emergency

The shears have two emergency stop buttons: one on the front, below the control touch screen, and another in the area above the cutting pedal. When one or both of the buttons are pressed, the machine stops immediately. The following pop-up message appears on the screen during an emergency stop situation.

The hydraulic pump and gauge movement are stopped in order to prevent any potential hazards. Once the situation returns to normal and the emergency stop buttons are released, this message can be removed by pressing . The pop-up window will then disappear, but a warning icon will appear in the upper right corner of the screen, similar to the one displayed below.

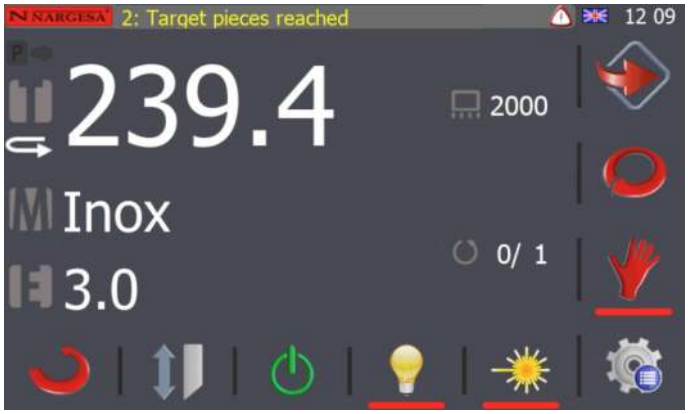

The machine cannot start operating again while this icon is present. The warning triangle indicates that the shears need to be reset, as a safety precaution. To do so, press the blue reset button and the warning icon will be removed from the notifications bar.

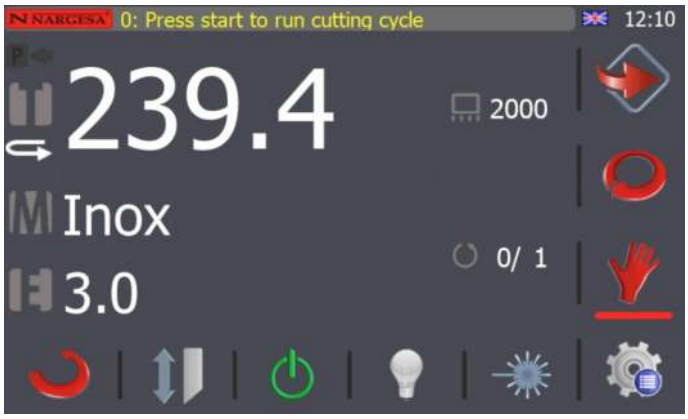

5.15. Photocell interruption

A safety photocell is located at the back of the machine to prevent hazardous situations such as accessing the gauge when the shears are in operation. Under such a situation, the photocell is interrupted and an emergency stop is carried out, which automatically stops the pump and the gauge movement. A pop-up window will also be displayed on the screen as shown below.

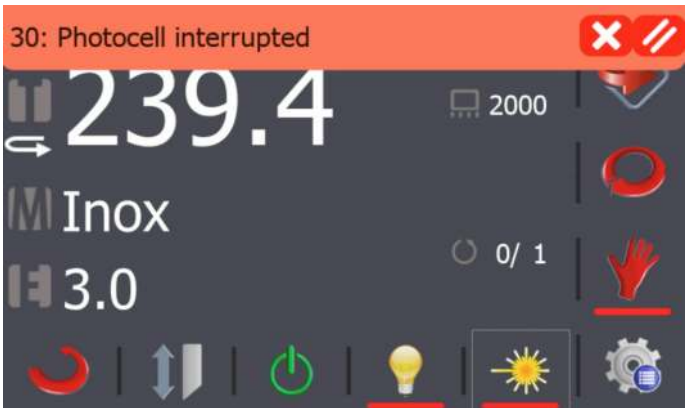

This warning message details the cause of the emergency situation, and the message alternates every few seconds with the general emergency message.

We can also remove the pop-up message by pressing ✕ but as with the general emergency situation, the warning icon ⚠ is displayed in the notifications bar to the right until the blue reset button is pressed. On doing so, the aforementioned icon will disappear, and the shears can return to normal operations.

5.16. Pump thermal protection

The hydraulic pump has a thermal protection element to prevent motor damage due to overheating. A pop-up message is displayed on the screen when the thermal protection has been activated.

This message warns that the pump thermal protection needs to be reset before operating the shears. As with the previous two situations, press ✕ to remove the message. The warning icon ⚠ will be displayed in the notifications bar to the right until the pump thermal protection is manually reset.

Given the nature of the message, the blue reset button does not need to be pressed in this case; the shears will be ready to operate once the pump thermal protection located inside the machine electrical panel is reset.

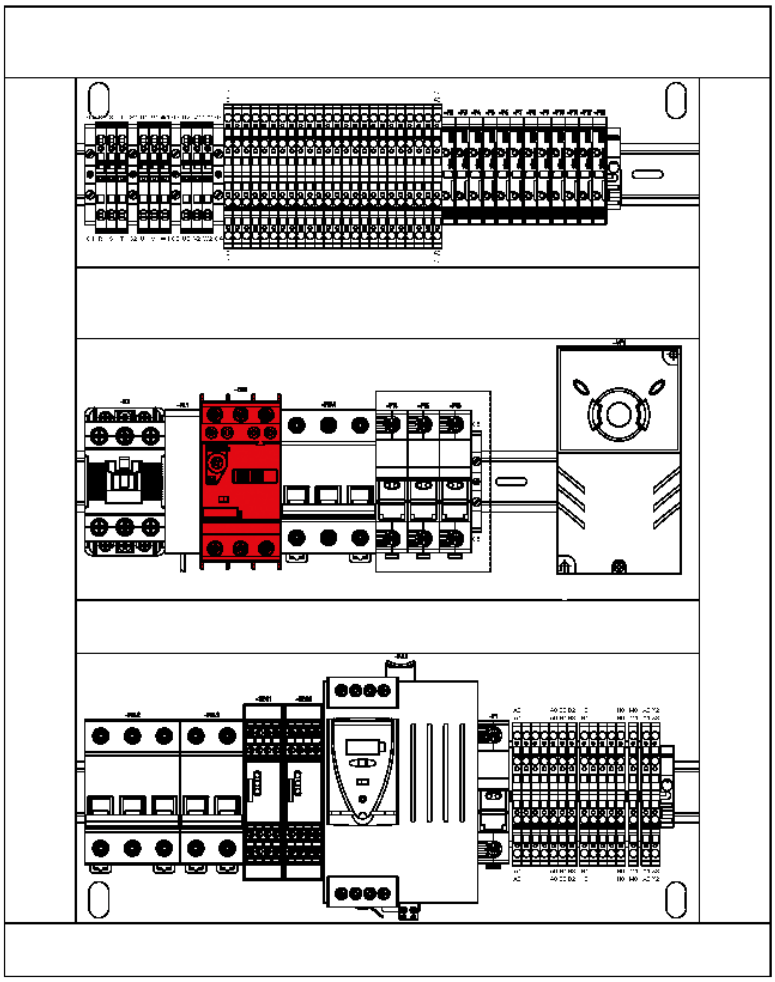

5.17. Alarm management

A new entry is recorded in the alarm log whenever there is an emergency situation due to an emergency stop, photocell interruption, the pump thermal protection is activated, or whenever there is a problem with the shear operations.

The details of each of the alarms related to the shear operations can be checked in the history log.

Press the button to do so and then when the menu window appears.

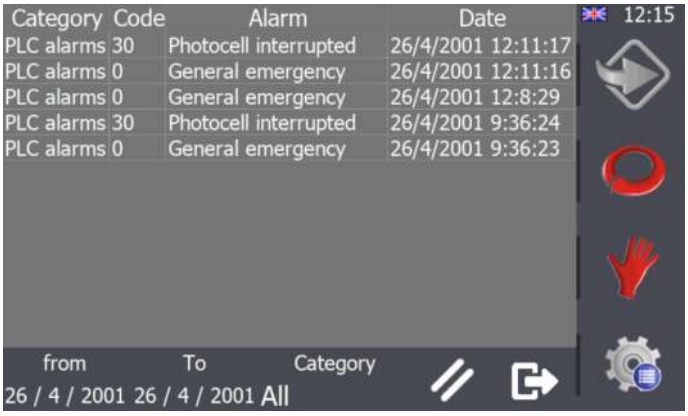

The machine alarm log can be viewed in this screen, and they can be filtered by date and category in order to create a detailed list of each of the incidents.

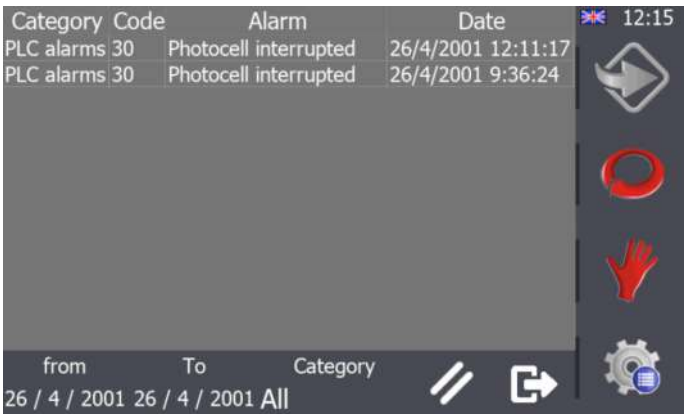

5.18. Input/output monitoring

The machine has a useful tool which can be used to monitor the status of each of the inputs and outputs to and from the shears, in order to carry out a self-diagnosis. Access the monitoring menu by pressing the button and then the icon.

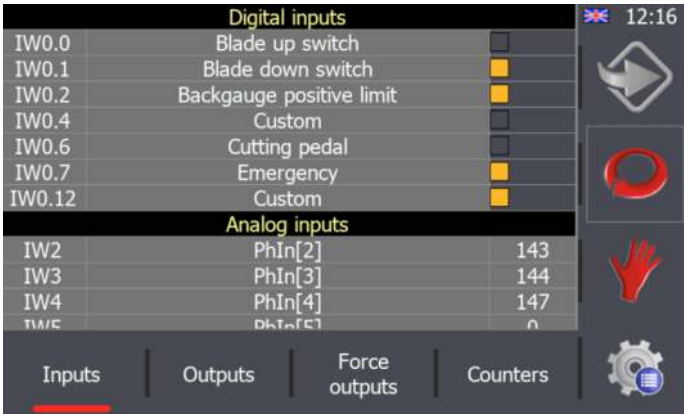

View the inputs to the shears in real time from this window.

View the outputs from the shears in real time from this window.

5.19. Material management

The shears are able to cut various materials with different widths. They can all be defined in a specific table to manage them suitably.

Press the button and then when the menu window appears. On doing so the window below is displayed:

The shears are supplied from the factory with a standard materials table. Materials can be added, changed and removed from this table. Use the icons located at the bottom of the screen to do so.

Create a new material by specifying the name and its resistance.

The material name and resistance can be changed by selecting it from the table.

The selected material can be removed from the table.

Use to access the table to manage the material selected.

The material management option allows various thicknesses, angles, blade separations and gauge corrections to be added, changed and removed for each of the table entries.

The blade separation and blade angle are set at the factory to precise values and changing these values in the table will not affect how the shears are used.

5.20. Import/export parameters, materials and programs

All the shear settings, predefined material parameters and programs created can be imported and exported to create back-ups.

Press the button to access the window displayed in the previous figure. Once the menu screen appears, press the button.

By default, all the filters are active as well as the internal memory option. Press to save all the parameters, materials and programs in the machine's internal memory, creating a back-up copy. A back-up copy can also be saved to an external USB by selecting the USB option and pressing again.

It is important that back-up copies are created frequently so that parameters, materials and the programs created are not lost. If all or part of this information needs to be recovered, simply select where the information can be found (internal memory or external USB), and press . The sequence of information that appears on the screen by doing so is as follows:

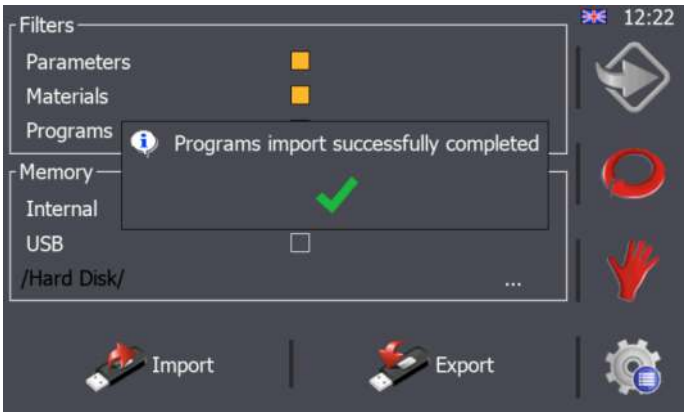

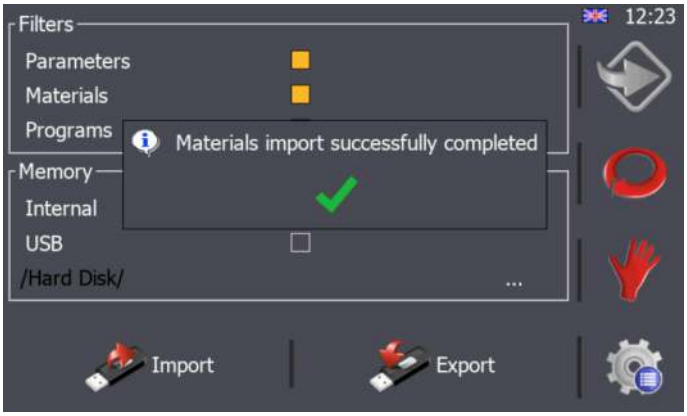

5.21. Remote service

The shears can be connected to the Ethernet using a cable supplied for this purpose. The IP address within the local area network is 10.10.51.110, which has been set at the factory. This also allows the machine to be serviced remotely.

The remote service allows Nargesa, as the manufacturer, to remotely connect the machine in order to resolve technical incidents and to provide training courses to the end client.

Press the button to activate the remote service and to access the menu window.

Once within the menu, press the button. The following screen will appear:

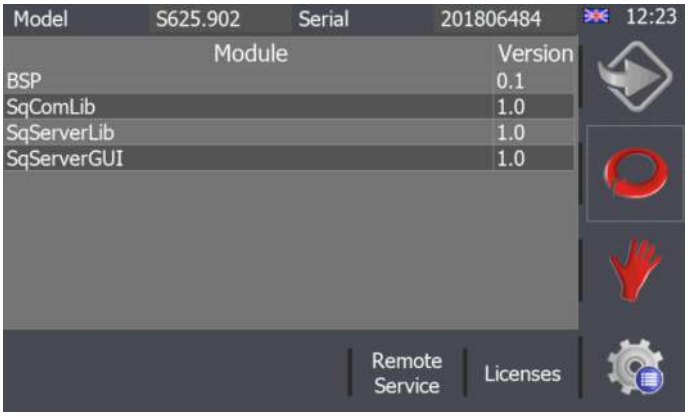

The information displayed in the previous image refers to the shear model and serial number, as well as the various IT system versions used in the user interface.

Press Remote Service to activate the remote service so that the Nargesa technical support department can connect to the machine to resolve any incidents and/or provide training courses.

5.22. Touch screen calibration

The touch screen has been correctly calibrated at the factory. However, it may need to be re-calibrated if it does not seem to respond correctly to the operator's actions.

Press the button to access the menu window. Once within the menu, press the button. The message displayed below will appear on doing so:

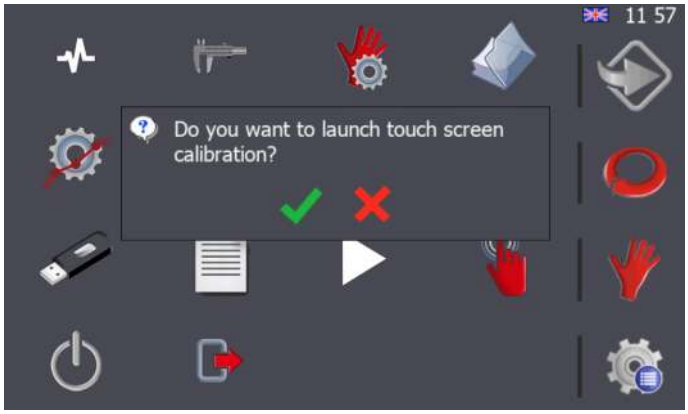

To accept, press , and the touch screen calibration process will start. At this point, the information displayed on the screen changes to the following:

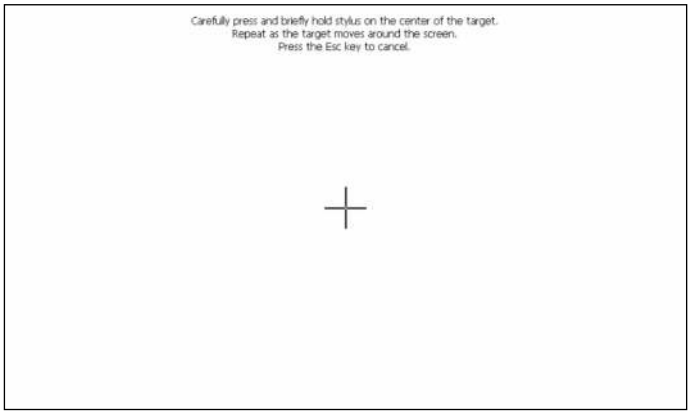

There is a cross in the centre of the screen which should be pressed for a few moments until it moves to a new position. This process is repeated at various points on the screen until the calibration process is complete.

6. WARNINGS

- Do not handle any component with the machine activated.
- Do not use the machine for any other purpose but the ones described in this manual.
- Wear safety gloves for handling the machine components during the cutting processes.
- Wear safety glasses and safety shoes homologated by CE.
- Do not work without the protections provided by the machine.
- Do not use cutting tools that are not provided by NARGESA.
- Do not cancel any protection device provided by the machine.
- NARGESA SL will not accept any responsibility if an accident occurs due to a negligent use of the machine on the operative's side or for not bearing in mind the usage and safety rules decribed in this manual.

Description of the machine signals.

- Prohibition of placing hands.
- Compulsory wearing of safety shoes.
- Compulsory wearing of protection gloves.
- Compulsory wearing of protection glasses.

7. THE BLADES

The main element for which this machine has been designed is the cutting of different kinds of metal sheet.

The blades are treated by various processes, which reinforces its liability and resistance at a normal use condition.

The guillotine C3006 has and upper blade and a lower blade each of them has got four exchangeable cutting corners.

The adjustment between the two blades should be 0.1 mm.

8. ACCESSORIES

Sheet metal back support C3006 CNC

The C3006 CNC sheet metal back support is a holder to prevent sheet metal bending, thus ensuring that it has good contact with the stop.

It is equipped with 63 wheels placed in 9 rows at different distances. These are specifically distributed to provide optimum support on sheets of different sizes.

The support also offers two options to take the material off. In the first choice, when it has performed the support function, it descends and tilts to be able to extract the sheet metal from the rear of the machine. In the second option, after cutting, the support rises and the stop pushes the sheet for its extraction from the front of the machine.

- Pneumatic operation through an external air supply.
- Pressure switch and pressure regulator supplied with the accessory
- Integrated pneumatic system
- Ball recirculation guide for up and down movement

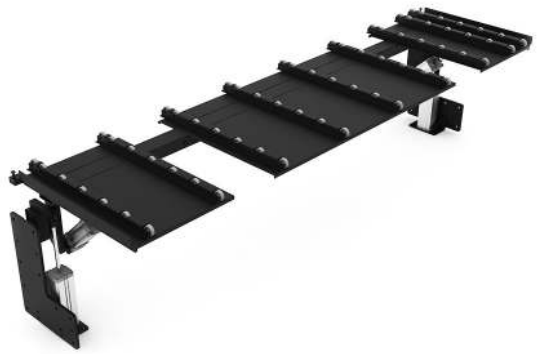

Reference	**140-06-02-00002**
Work pressure	4/7 Kg.
Dimensions	3260x913x760 mm
Weight	250 Kg.

Technical annex

Hydraulic shear C3006CNC

General exploded view

Detail of treaders

Detail of guided gauge

Detail of dirving gauge

Detail of activation triangular connecting rod

Detail of triangular rod

Detail of cylinder

Parts listing of the folding block

Detail of Hydraulic kit

Electric box

Electric maps

Hydraulic map

A1. List of parts

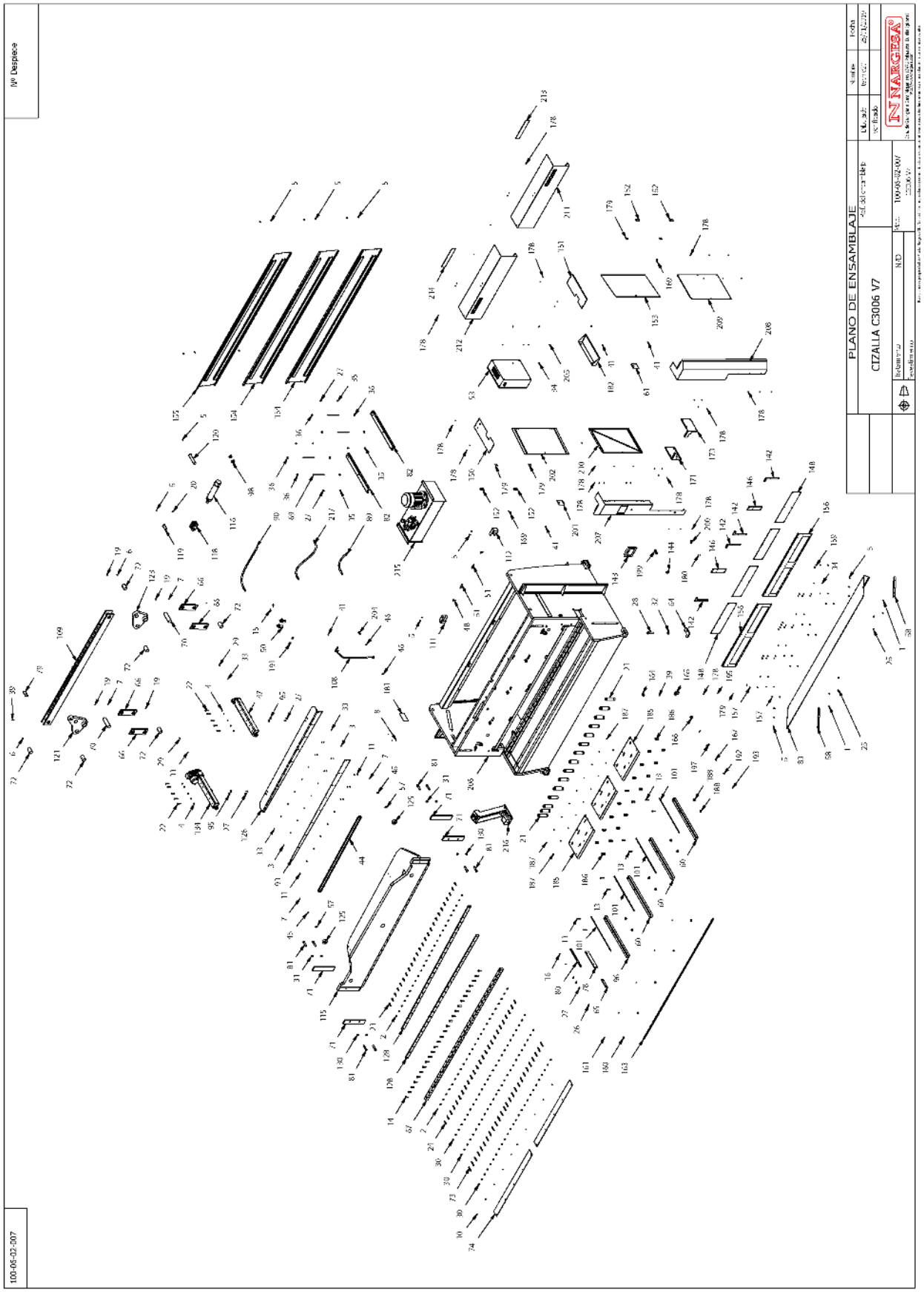

Elemento	Miniatura	Nº de pieza	Descripción	CTDAD
1		120-06-02-00505	SOPORTE GRUPO HIDRAULICO	2
2		140-06-02-00001	CUCHILLA DE CORTE	2
3		120-06-02-00575	MANGUERA FLEXIBLE 1/2" TG 1/2"-CODO 90º TG 1/2" LONGITUD 730 mm	1
4		130-06-02-00552	ESTRUCTURA CIZALLA C3006	1
5		130-06-02-00551	CONJUNTO TAPA FRONTAL DERECHA C3006	1
6		130-06-02-00550	CONJUNTO TAPA FRONTAL IZQUIERDA C3006	1
7		120-06-01-00569	TAPA CABLES IZQUIERDA	1
8		130-06-02-00529	CONJUNTO TAPA LATERAL INFERIOR IZQUIERDA C3006	1
9		130-06-02-00527	CONJUNTO TAPA LATERAL INFERIOR DERECHA C3006	1
10		130-06-02-00521	CONJUNTO MESA C3006	3
11		130-06-02-00520	CONJUNTO TAPA FRONTAL INFERIOR	2
12		130-06-02-00519	CONJUNTO TAPA TRASERA	2
13		130-06-02-00518	CONJUNTO TAPA TRASERA SUPERIOR	1
14		130-06-02-00517	CONJUNTO PUERTA IZQUIERDA C3006	1
15		130-06-02-00516	CONJUNTO PUERTA DERECHA C3006	1

Elemento	Miniatura	Nº de pieza	Descripción	CTDAD
16		130-06-02-00505	CONJUNTO CHAPA TOPE C-3006	1
17	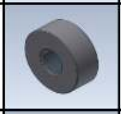	130-06-02-00504	CONJUNTO PATIN	2
18		130-06-02-00466	CONJUNTO BULON TRASERO CILINDRO	1
19		130-06-02-00463	CONJUNTO BULON DELANTERO CILINDRO	1
20		130-06-02-00461	HORQUILLA CIZALLA	1
21		130-06-01-00508	Conjunto Pisor Carrera 22 mm	15
22		130-06-02-00450	Trancha	1
23		020-D931-M12X60	TORNILLO HEXAGONAL DIN 931 M12X60	10
24	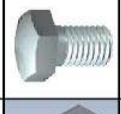	020-D931-M14X65	TORNILLO HEXAGONAL DIN 931 M14X65	25
25	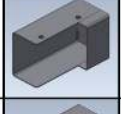	130-06-02-00324	CONJUNTO PROTECCION CELULA SEGURIDAD IZQUIERDA	1
26	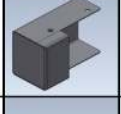	130-06-02-00323	CONJUNTO PROTECCION CELULA SEGURIDAD DERECHA	1
27		130-06-02-00301	CONJUNTO BIELA TRANSMISION	1
28		120-06-01-00558	PASAMANO SOPORTE CHAPAS DERECHO	3
29	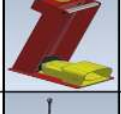	130-06-01-00728	PIE PEDAL CIZALLA	1
30		130-06-01-00514	TUBO PISONES	1

Elemento	Miniatura	Nº de pieza	Descripción	CTDAD
31		120-06-01-00523	ANGULO SOPORTE CHAPA SALIDA	2
32		122-PLC-0000-001	Placa Caracteristicas General	1
33		122-CAL-0602-002	Calca PP200, C2006 i C3006	1
34		122-06-01-00001	REGLA MILIMETRADA DELANTERA	4
35		120-06-02-00825	Tapa Frontal Superior Izquierda C3006	1
36		120-06-02-00824	Tapa Frontal Superior Derecha C3006	1
37		120-06-02-00786	MANGUERA FLEXIBLE DE 1/2" TG 1/2" - TG DE 1/2" LONGITUD 860 mm	1
38		120-06-02-00784	METACRILATO MODELO	2
39		120-06-02-00760	TAPA LATERAL DERECHA	1
40		120-06-02-00759	TAPA LATERAL IZQUIERDA	1
41		120-06-02-00751	POLICARBONATO FRONTAL	4
42		120-06-02-00723	SEPARADOR EXTERIOR TRASERO CILINDRO HIDRAULICO D55X40.5X15	2
43		120-06-02-00721	PASAMANO CON CINTA METRICA SOPORTE CHAPAS	1
44		120-06-02-00720	ARANDELA INFERIOR CHAPA TOPE D35XD10.5X6	4
45		120-06-02-00715	CHAPA FRONTAL TOPE C3006	1

Elemento	Miniatura	Nº de pieza	Descripción	CTDAD
46		120-06-02-00577	MANGUERA FEXIBLE DE 1/2 " TG-TG DE 1/2" LONGITUD 950	1
47		130-06-02-00553	TOPE CONDUCIDO C3006	1
48		120-06-02-00529	RAMPA DE CAIDA	1
49		120-06-01-00130	ARANDELA GRUESO PATIN 42X30X1	2
50		120-06-02-00425	TORNILLO AJUSTE TRANCHA	8
51		120-06-02-00412	SEPARADOR	1
52		120-06-02-00395	TOPE POSICION TRANCHA	1
53		120-06-02-00372	PASAMANO LATERAL GUIA ENTRADA	1
54		120-06-02-00340	CHAPA DELANTERA MESA	2
55		120-06-02-00339	VARILLA REGULACION CUCHILLA	26
56		120-06-02-00336	BULONES ARTICULACION BIELAS 94 MM	6
57		120-06-02-00334	BULONES ARTICULACION BIELAS Ø60X205	2
58		120-06-02-00330	VARILLA SUSTENTACION GRUPO HIDRAULICO	4
59		120-06-02-00311	PASAMANO SOPORTE CUCHILLA	1
60		120-06-02-00310	BIELA	4

Elemento	Miniatura	Nº de pieza	Descripción	CTDAD
61		120-06-01-00825	TAPA SUPERIOR LATERAL DERECHA	1
62		120-06-01-00821	TAPA SUPERIOR LATERAL IZQUIERDA	1
63		120-06-01-00793	SOPORTE INICIAL LASER LINEA	1
64		120-06-01-00792	SOPORTE LASER LINEA	1
65		120-06-01-00791	SOPORTE GIRATORIO LASER LINEA	1
66		120-06-01-00790	SOPORTE PRINCIPAL LASER LINEA	1
67		120-06-01-00765	SUPLEMENTO MESA CHAPAS	18
68		120-06-01-00761	ESTANTERIA LATERAL	1
69		120-06-01-00747	SOPORTE CENTRAL CHAPA FRONTAL	2
70		120-06-01-00746	SOPORTE LATERAL CHAPA FRONTAL	4
71		120-06-01-00738	PASAMANO GUIA TRANCHA	4
72		120-06-01-00732	GRUESO SOPORTE INFERIOR SOPORTE CHAPA	8
73		120-06-01-00721	PASAMANO TRASERO GUIA ENTRADA	1
74		120-06-01-00706	CHAPA ROSCADA FINAL DE CARRERA CIZALLAS	2
75		120-06-01-00578	SOPORTE PIE CIZALLA	4

Elemento	Miniatura	Nº de pieza	Descripción	CTDAD
76		120-06-01-00570	TAPA CABLES DERECHA	1
77		130-06-02-00530	Conjunto Grupo Hidraulico C3006	1
78		020-D7991-M6X20	Tornillo Allen DIN 7991 M6X20	12
79		020-D933-M6X25	TORNILLO HEXAGONAL DIN 933 M6X25	2
80		050-LED-00010	Tira Led 2.975mm C3006	1
81		050-PEM-22	Paro Emergencia Ø22	1
82		050-LSR-00002	Laser Verde Linea Cizalla 10mW Ref. AGLL2	1
83		050-KIE-0602-003	INSTALACION ELECTRICA C3006 V6	1
84		050-GEN-00022	Soporte Perfil Led	5
85	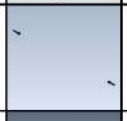	050-FT-00001	DETECTOR FOTOCELULA 3H PNP ENF. RECTO CONECT	1
86		050-FC-RUEDA	Final De Carrera Con Rueda	2
87		050-CNT-00002	CONECTOR M12 ACODADO CABLE 10 MTS	1
88		050-CNT-00001	CONECTOR M12 ACODADO 5 MTS	1
89	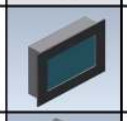	050-CNC-00003	Pantalla ESA S625 CC-	1
90		050-BIS-00002	BISAGRA	4

Elemento	Miniatura	Nº de pieza	Descripción	CTDAD
91		050-BE-00003	Zocalo Recto Ck03I	1
92		050-APE-00001	PLACA SEÑALIZACION PARO EMERGENCIA	1
93		040-TES-00001	TORNILLO PARA ESFERA DE 1/2"	1
94		040-JMG-00001	Junta Metal Goma 1/2' Gas	2
95		031-LLT-00001	LLAVE PARA CIERRE TRIANGULO DE 8 FLOTANTE NIQUELADA	1
96		031-CLT-00001	CIERRE DE LENGÜETA CON TRIANGULO 8 M20	2
97		030-D471-00004	CIRCLIP DIN 471 EJE DE Ø30	2
98		030-CD-00010	CORREA DENTADA HTD 3808-8M-20	1
99		020-I7380-M8X25	Tornillo Allen Abombado ISO7380 M8X25	12
100		020-I7380-M8X16	TORNILLO ALLEN ISO 7380 M8X16	24
101		020-I7380-M8X10	Tornillo Allen Abombado ISO7380 M8X10	5
102		020-I7380-M6X8	Tornillo Allen Abombado ISO7380 M6X8	57
103		020-I7380-M6X6	Tornillo Allen Abombado ISO7380 M6X6	6
104		020-I7380-M6X12	Tornillo Allen Abombado ISO7380 M6X12	4
105		020-I7380-M5x10	TORNILLO ISO 7380 M5X10	1

Elemento	Miniatura	Nº de pieza	Descripción	CTDAD
106		020-I7380-M4X6	Tornillo Allen Abombado ISO7380 M4X6	2
107		020-D985-M16	TUERCA DIN 985 M16	8
108		020-D985-M10	TUERCA AUTOBLOCANTE DIN 985 M10	4
109		020-D936-M22X1C5	Tuerca hexagonal	4
110		020-D934-M8	TUERCA HEXAGONALI DIN934 M8	12
111		020-D934-M6	Tuerca Hexagonal DIN934 M6	14
112		020-D934-M5	Tuerca Hexagonal DIN934 M5	16
113		020-D934-M24	TUERCA DIN 934 M24	4
114		020-D934-M22X1C5	TUERCA HEXAGONAL DIN 934 M22 PASO 150	4
115		020-D934-M14	TUERCA DIN 934 M14	78
116		130-06-02-00455	Conjunto Cilindro Hidraulico C3006	1
117		020-D933-M24X100	TORNILLO HEXAGONAL DIN 933 M24X100	4
118		020-D933-M10X25	TORNILLO HEXAGONAL DIN 933 M10X25	10
119		020-D933-M10X20	TORNILLO HEXAGONAL DIN 933 M10X20	2
120		020-D933-M10X16	TORNILLO HEXAGONAL DIN 933 M10X16 8.8 PAVONADO	4

Elemento	Miniatura	Nº de pieza	Descripción	CTDAD
121		130-06-02-00400	Biela Triangular De Accionamiento	1
122		020-D931-M14X50	TORNILLO HEXAGONAL DIN 931 M14X50	25
123		130-06-02-00401	Biela Triangular	1
124		020-D913-M8X20	ESPARRAGO ALLEN DIN 913 M8X20	4
125		020-D913-M8X16	ESPARRAGO ALLEN DIN 913 M8X16	1
126		020-D913-M8X10	ESPARRAGO ALLEN DIN 913 M8X10	10
127		020-D913-M5X16	ESPARRAGO ALLEN DIN 913 M5X16	16
128		020-D913-M4X5	ESPARRAGO ALLEN DIN 913 M4X5	1
129		020-D912-M8X20	TORNILLO ALLEN DIN912 M8X20	2
130		020-D912-M4X30	TORNILLO ALLEN DIN 912 M4x30 PAVONADO	4
131		020-D912-M3X25	TORNILLO ALLEN DIN 912 M3X25	2
132		020-D912-M16X50	TORNILLO ALLEN DIN 912 M16X50 8.8 PAVONADO	26
133		020-D912-M10X60	Tornillo Allen DIN 912 M10 X60	8
134		130-06-01-00753	TOPE MOTRIZ C3006	1
135		020-D7991-M6X16	TORNILLO ALLEN DIN 7991 M6X16	10

Elemento	Miniatura	Nº de pieza	Descripción	CTDAD
136		020-D7991-M6X12	Tornillo Allen Avellanado DIN7991 M6X12	18
137		020-D7991-M3x8	TORNILLO ALLEN DIN 7991 M3X8	10
138		020-D7985-M3X10	TORNILLO DIN7985 M3X10 Zincado	2
139		020-D7337-3X8	Remache De Clavo DIN7337 De Al D3X8	4
140		020-D71412-00002	Engrasador DIN 71412 M8X1.25 Recto	9
141		020-D71412-00001	ENGRASADOR DIN 71412 M8 CODO	4
142		020-D6921-M8X16	Tornillo Hexagonal Embridado Din6921 M8X16	24
143		020-D127-M12	Arandela Glower DIN127 Para M12	10
144		020-D125B-M8	Arandela Biselada DIN125B Para M8	8
145		020-D125B-M6	ARANDELA BISELADA DIN125B PARA M6	12
146		020-D125B-M5	ARANDELA DIN 125 B M5	17
147		020-D125B-M14	Arandela Biselada DIN125B Para M14	50
148		020-D125B-M10	Arandela Biselada DIN125B Para M10	4

A2. Detail of treaders

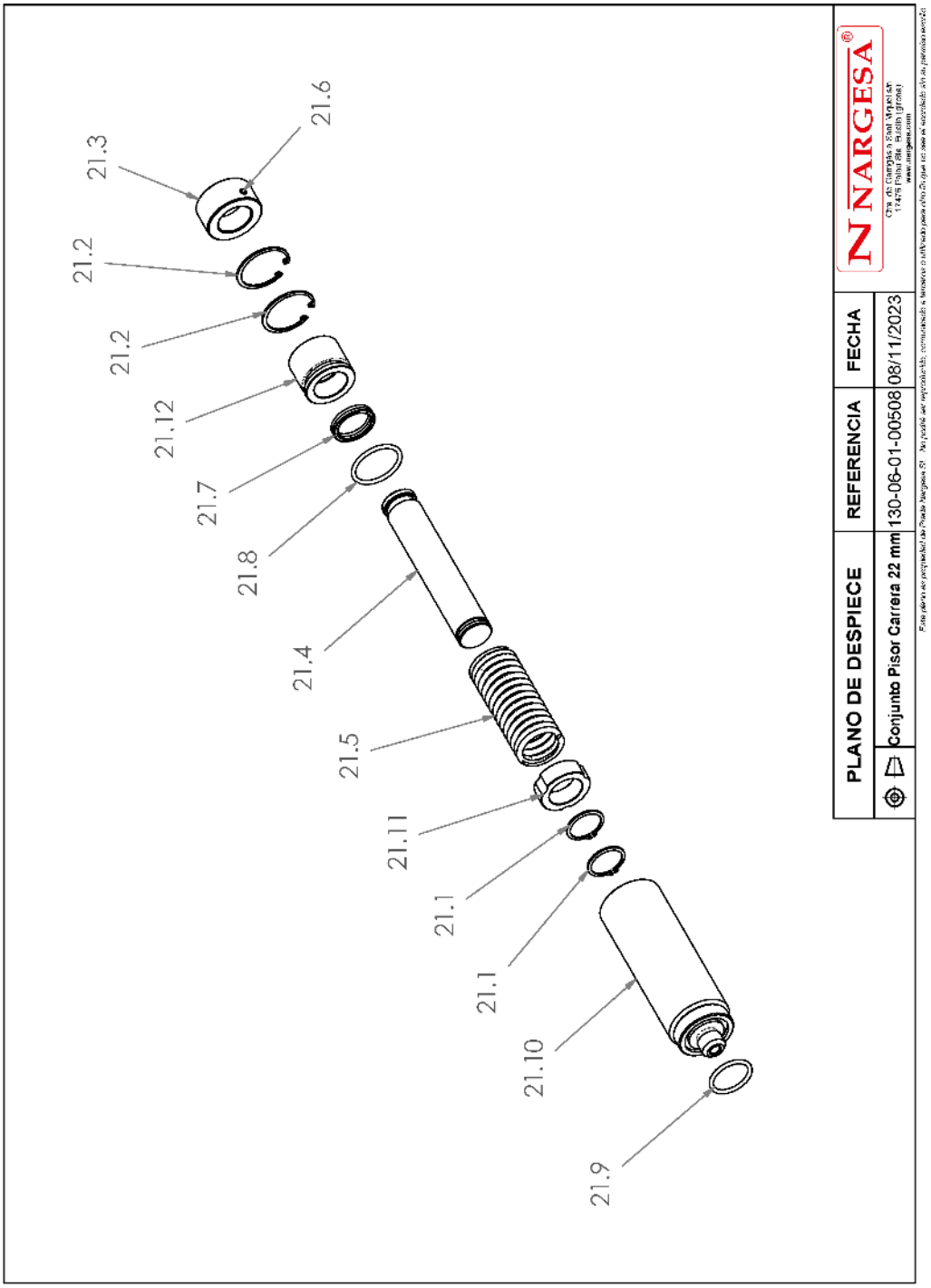

Elemento	Miniatura	Nº de pieza	Descripción	CTDAD
21.1		030-D471-00004	CIRCLIP DIN 471 EJE DE Ø30	2
21.2		030-D472-00002	CIRCLIP DIN 472 PARA AGUJERO Ø45	2
21.3	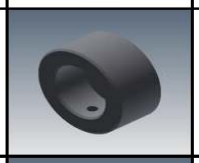	120-06-01-00051	BASE PISOR	1
21.4		120-06-01-00057	VASTAGO PISOR	1
21.5		120-06-01-00054	MUELLE 5X42X100X10 ESPIRAS	1
21.6		020-D913-M6X10	Espárrago Allen DIN913 M6X10	1
21.7		040-BA-00003	COLLARIN Ø30XØ38X7	1
21.8	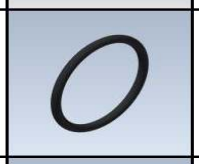	040-JT-00014	JUNTA TORICA D39X3,5 90 Shore	1
21.9		040-JT-00012	JUNTA TORICA D32X3,5 90 Shore	1
21.10		130-06-01-00510	CONJUNTO SOLDADURA CAMISA PISOR	1

Elemento	Miniatura	Nº de pieza	Descripción	CTDAD
21.11		120-06-01-00544	GUIA INTERIOR PISOR	1
21.12	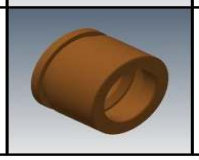	120-06-01-00545	DOLLA BRONCE PISOR	1

A3. Detail of guided gauge

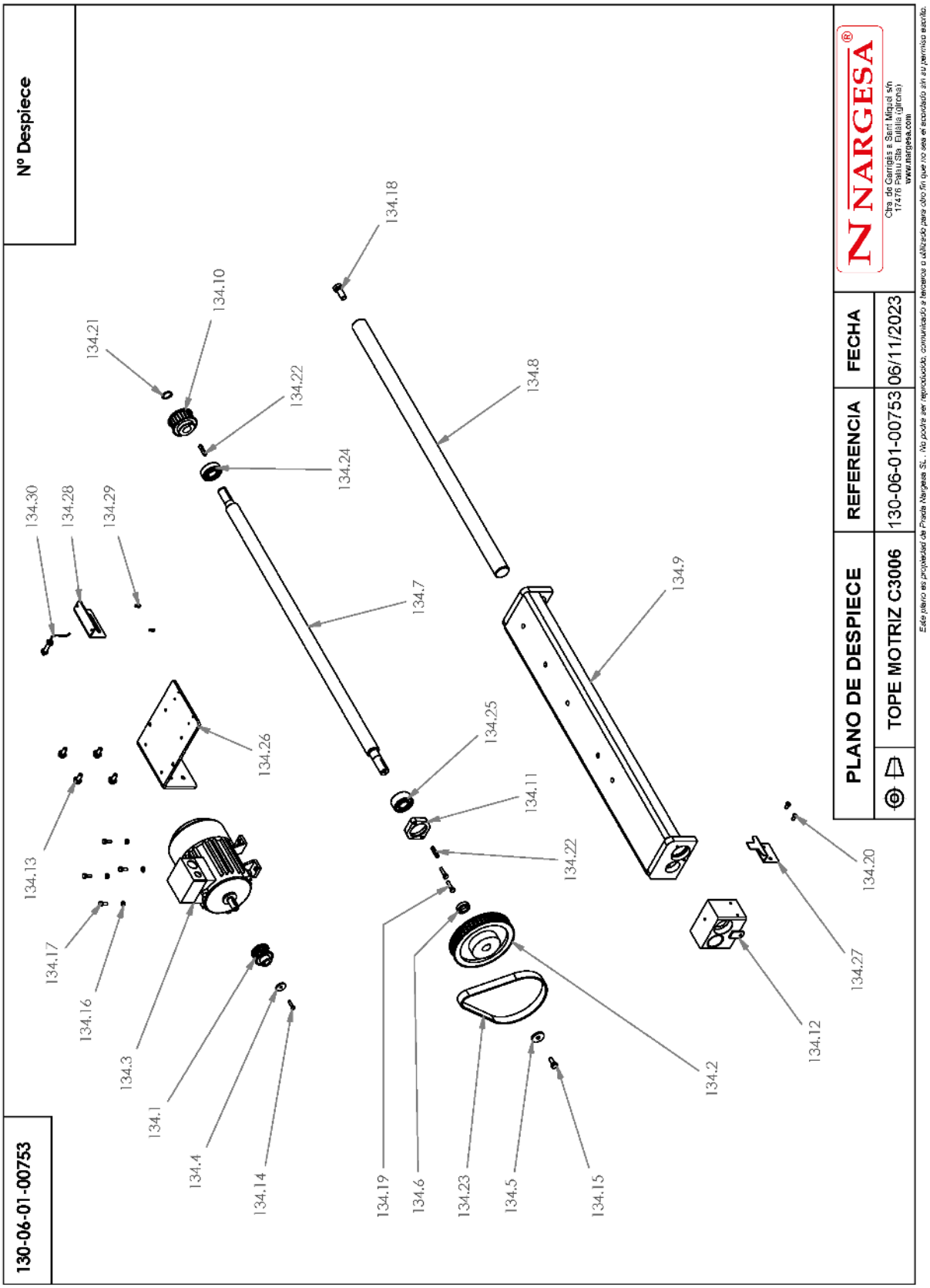

Elemento	Miniatura	Nº de pieza	Descripción	CTDAD
134.1		120-06-01-00187	POLEA ACCIONAMIENTO MOTOR	1
134.2		120-06-01-00198	POLEA ACCIONAMIENTO TOPE	1
134.3		050-ME-00012	Motor Electrico d 0.37KW a 1400 rpm con patas B3	1
134.4		120-06-01-00188	ARANDELA DE GRUESO Ø23XØ5.5X3	1
134.5		120-06-01-00197	ARANDELA DE GRUESO Ø30XØ8.5X4	1
134.6		120-05-03-00617	SEPARADOR POLEA DELANTERA TOPE MP1400	1
134.7		120-06-02-00700	HUSILLO MOTRIZ TOPE C3006	1
134.8		120-06-02-00705	GUIA TOPE C3006	1
134.9		130-06-02-00503	ESTRUCTURA SOLDADA TOPE MOTRIZ	1
134.10		120-06-02-00707	POLEA DENTADA TOPE	1
134.11	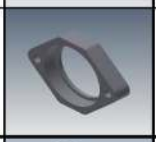	120-06-02-00711	FIJACION COJINETE FRONTAL C3006	1
134.12	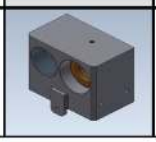	130-06-02-00508	CONJUNTO SOPORTE TUERCA TOPE	1

Elemento	Miniatura	Nº de pieza	Descripción	CTDAD
134.13		020-D6921-M8X16	Tornillo Hexagonal Embridado Din6921 M8X16	4
134.14		020-D933-M5X20	TORNILLO HEXAGONAL DIN 933 M5X20	1
134.15		020-D933-M8X20	TORNILLO HEXAGONAL DIN 933 M8X20	1
134.16		020-D125B-M6	ARANDELA BISELADA DIN125B PARA M6	4
134.17		020-D933-M6X16	TORNILLO HEXAGONAL DIN 933 M6X16	4
134.18		020-D933-M12X30	Tornillo Hexagonal DIN 933 M12x30	1
134.19		020-D933-M6X25	TORNILLO HEXAGONAL DIN 933 M6X25	2
134.20		020-I7380-M6X12	Tornillo Allen Abombado ISO7380 M6X12	2
134.21		030-D471-00010	CIRCLIP DIN 471 EJE DE Ø20	1
134.22		030-D6885A-00023	CHAVETA PARALELA DIN 6885A 5X5X32	2
134.23		030-CD-00001	CORREA DENTADA 225 L 075	1
134.24	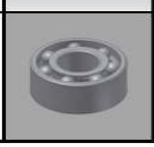	030-CJ-00012	COJINETE DE BOLAS 6204 2RS	1

Elemento	Miniatura	Nº de pieza	Descripción	CTDAD
134.25	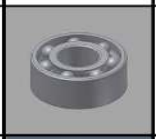	030-CJ-00004	COJINETE 3204 D20xD47x20.6 2RS	1
134.26	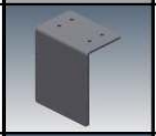	120-06-02-00735	SOPORTE MOTOR TOPE CIZALLA	1
134.27	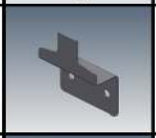	120-06-01-00741	ACCIONAMIENTO FINAL DE CARRERA TOPE	1
134.28		120-06-01-00742	SOPORTE INDUCTIVO TOPE CIZALLA	1
134.29		020-D912-M4X8	TORNILLO ALLEN DIN 912 M4 X8 PAVONADO	2
134.30		050-IND-00004	Detector Inductivo Diell M8 NC PNP-10-30 M12	1

A4. Detail of dirving gauge

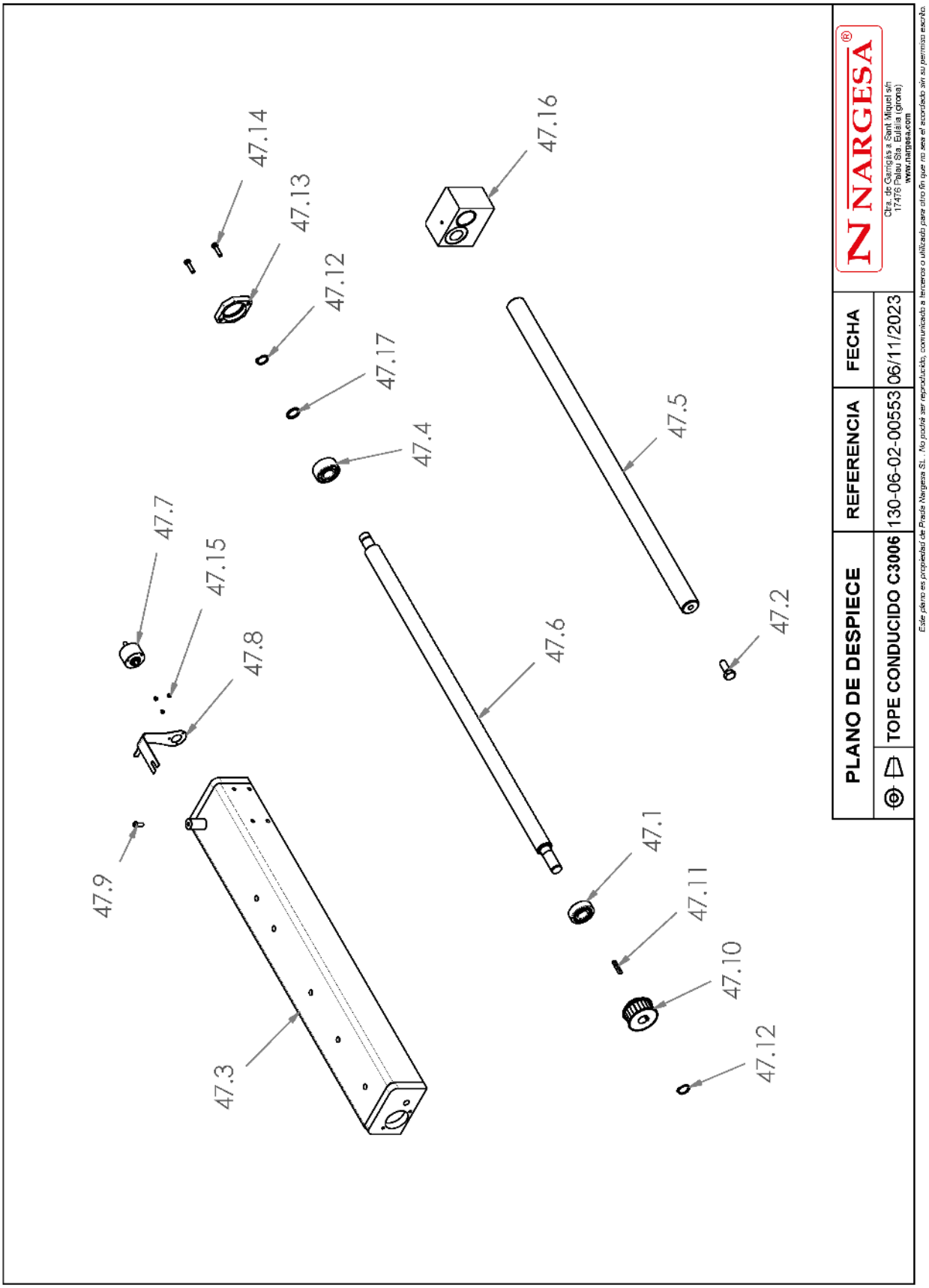

Elemento	Miniatura	Nº de pieza	Descripción	CTDAD
47.1		030-CJ-00012	COJINETE DE BOLAS 6204 2RS	1
47.2		020-D933-M12X30	Tornillo Hexagonal DIN 933 M12x30	1
47.3		130-06-02-00502	ESTRUCTURA SOLDADA TOPE CONDUCIDO	1
47.4		030-CJ-00004	COJINETE 3204 D20xD47x20.6 2RS	1
47.5		120-06-02-00705	GUIA TOPE C3006	1
47.6		120-06-02-00701	HUSILLO CONDUCIDO C3006	1
47.7		050-ENC-00001	Encoder Incremental Hohner Ref. 21-137-450	1
47.8		120-06-01-00202	CHAPA SOPORTE ENCODER	1
47.9		020-I7380-M6X16	Tornillo Allen Abombado ISO7380 M6X16	1
47.10		120-06-02-00707	POLEA DENTADA TOPE	1
47.11		030-D6885A-00023	CHAVETA PARALELA DIN 6885A 5X5X32	1
47.12		030-D471-00010	CIRCLIP DIN 471 EJE DE Ø20	2
47.13		120-06-02-00711	FIJACION COJINETE FRONTAL C3006	1
47.14		020-D933-M6X25	TORNILLO HEXAGONAL DIN 933 M6X25	2
47.15		020-D7985-M3X4	Tornillo DIN7985 M3X4 Philips	3

Elemento	Miniatura	Nº de pieza	Descripción	CTDAD
47.16	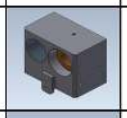	130-06-02-00508	CONJUNTO SOPORTE TUERCA TOPE	1
47.17		120-06-02-00730	ARANDELA FIJACIÓN HUSILLO CONDUCIDO	1
47.18		020-D913-M5X8	Esparrago Allen DIN 913 M5X8	1

A5. Detail of activation triangular connecting rod

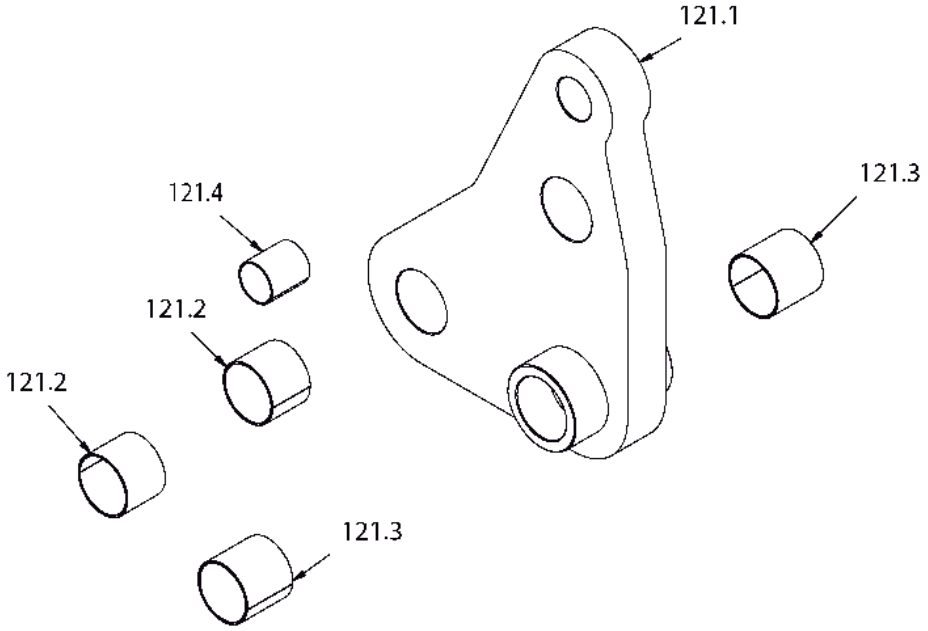

Elemento	Miniatura	Nº de pieza	Descripción	CTDAD
121.1		130-06-02-00400-FM2	MECANIZADO BIELA TRIANGULAR ACCIONAMIENTO	1
121.2	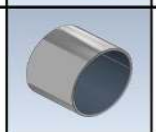	030-DP-00028	DOLLA PARTIDA-60-65-50	2
121.3	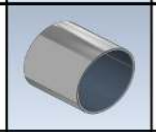	030-DP-00029	DOLLA PARTIDA-60-65-60	2
121.4	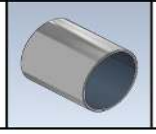	030-DP-00017	DOLLA PARTIDA D40XD44X50	1

A6. Detail of triangular rod

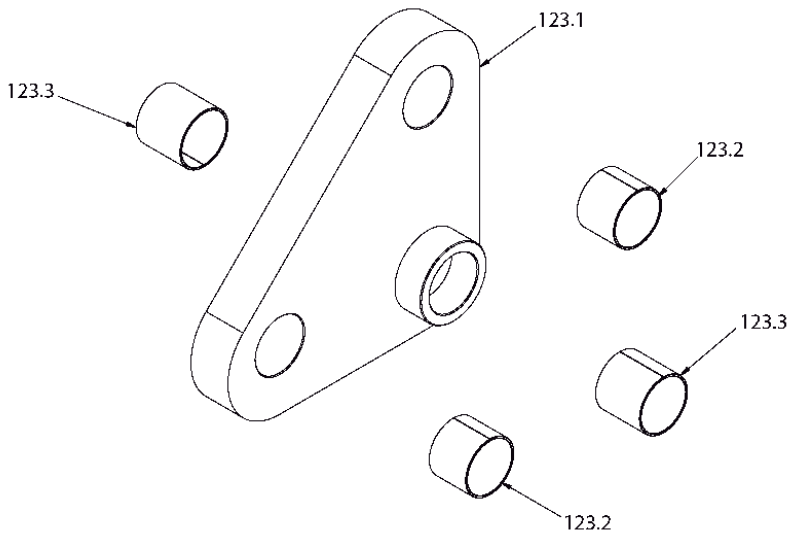

Elemento	Miniatura	Nº de pieza	Descripción	CTDAD
123.1		130-06-02-00401-FM2	BIELA TRIANGULAR MECANIZADO	1
123.2	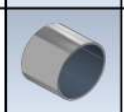	030-DP-00028	DOLLA PARTIDA-60-65-50	2
123.3		030-DP-00029	DOLLA PARTIDA-60-65-60	2

A7. Detail of cylinder

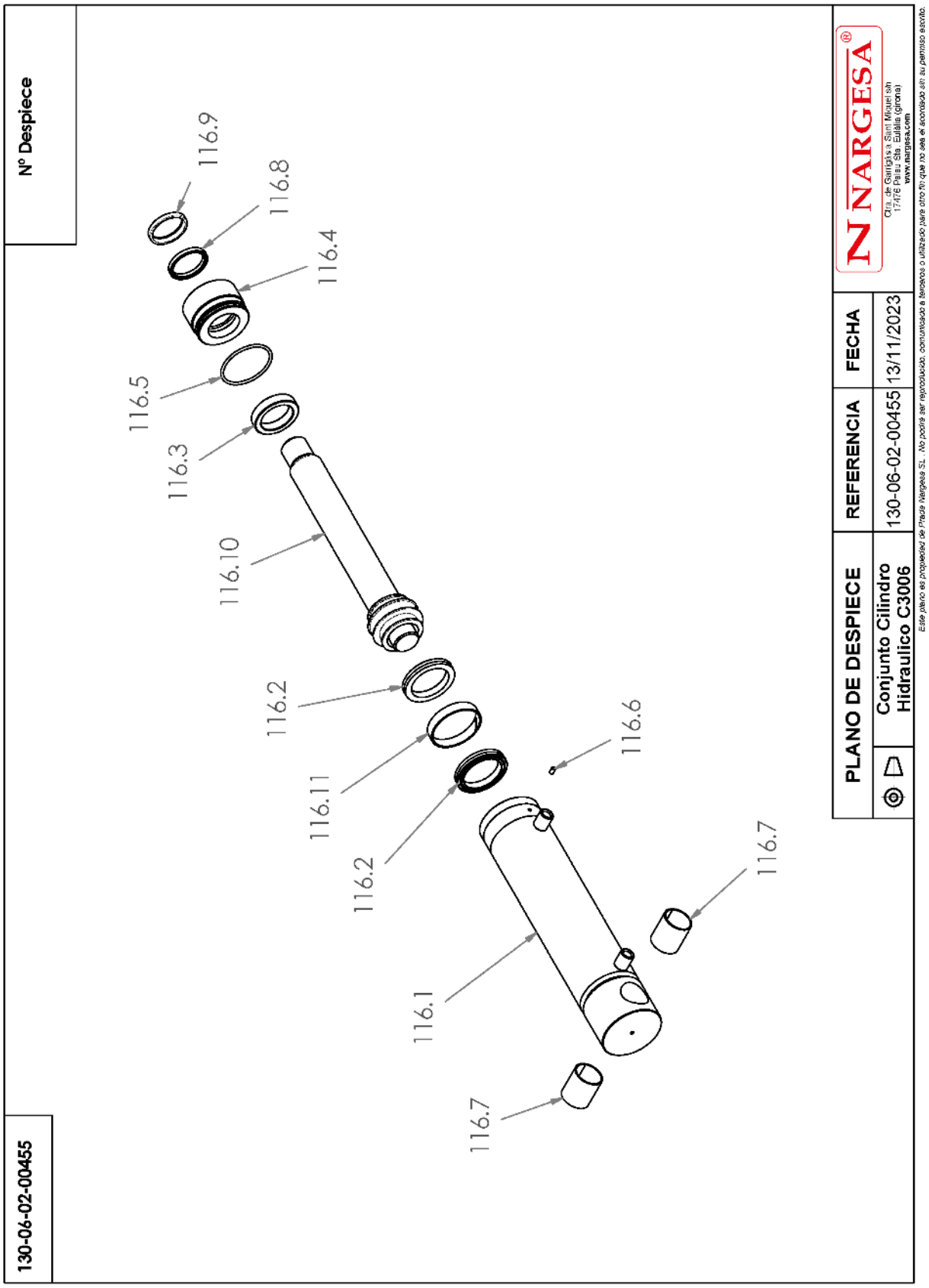

Elemento	Miniatura	Nº de pieza	Descripción	CTDAD
116.1		130-06-02-00307	CONJUNTO FINAL CAMISA CILINDRO CIZALLA	1
116.2		040-JC-00001	JUNTA DE CILINDRO D80XD60X12	2
116.3		120-06-02-00375	TOPE DELANTERO CILINDRO HIDRAULICO	1
116.4	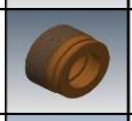	120-06-02-00732	DOLLA DE BRONCE	1
116.5		040-JT-00021	JUNTA TORICA D74X4 90 Shore	1
116.6		020-D913-M6X10	Espárrago Allen DIN913 M6X10	1
116.7	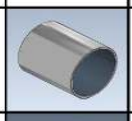	030-DP-00017	DOLLA PARTIDA D40XD44X50	2
116.8		040-BA-00007	Collarin Ba D50XD60X7.3 Ref: 436893	1
116.9		040-RAS-00004	Rascador D50XD60X7/10 Ref: 152016	1
116.10		130-06-02-00311	CONJUNTO VASTAGO SOLDADO	1
116.11		040-GUI-00001	GUIA D75XD80X15 - PTFE-Bronce	1

A8. Parts listing of the folding block

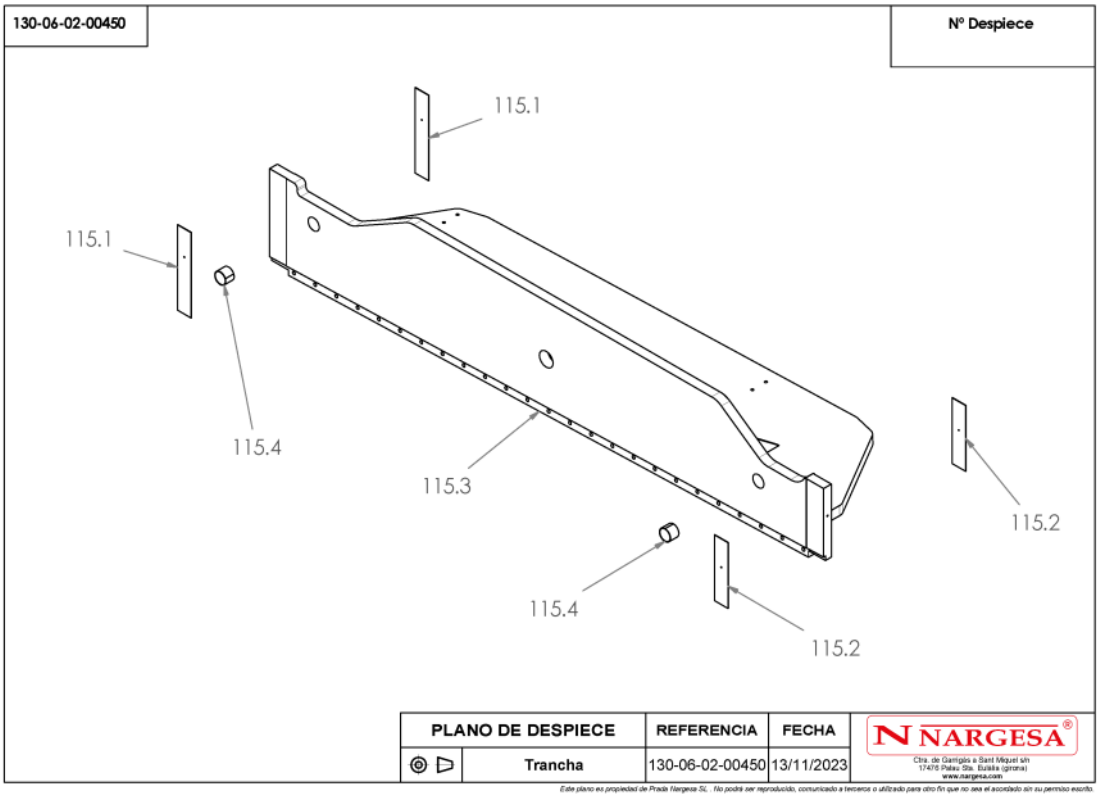

Elemento	Miniatura	Nº de pieza	Descripción	CTDAD
115.1		120-06-02-00328	REGLA BIPLAST 435X80X2	2
115.2		120-06-02-00329	REGLA BIPLAST 335X80X2	2
115.3		130-06-02-00450-FM2	MECANIZADO TRANCHA C-3006	1
115.4		030-DP-00028	DOLLA PARTIDA-60-65-50	2

A9. Detail of Hydraulic kit

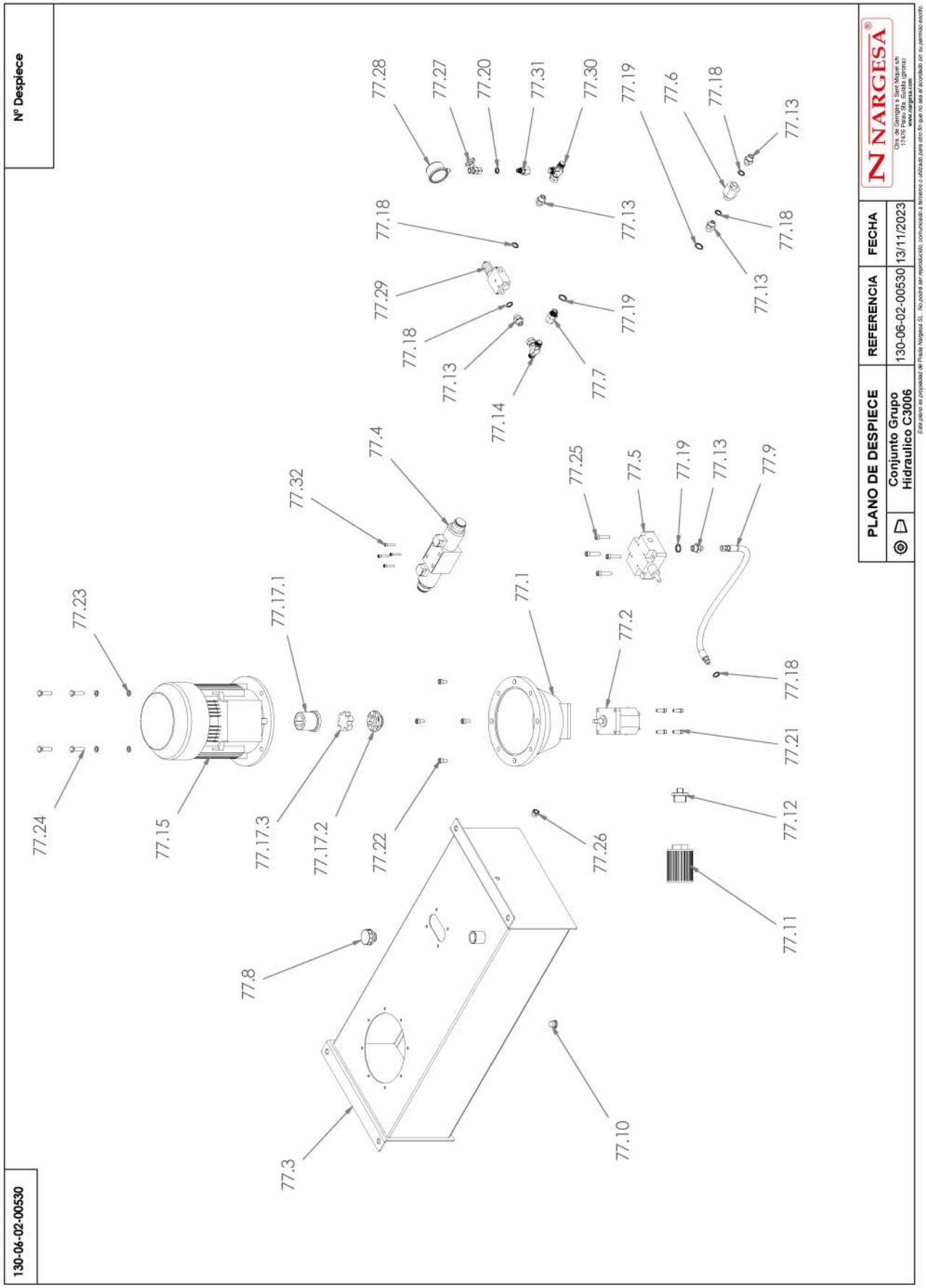

Elemento	Miniatura	Nº de pieza	Descripción	CTDAD
77.1		040-CA-00001	Campana Acoplamiento Bomba Tipo L Motor 7.5/10/12	1
77.2		040-BH-00001	Bomba Hidraulica de 22 Litros Carcasa De Aluminio	1
77.3		130-06-02-00531	Depósito Grupo Hidraulico C3006	1
77.4		040-ELV-00001	Electrovalvula TN10 CETOP 5	1
77.5		040-VLP-00001	Válvula Limitadora De Presión	1
77.6		040-RC-00001	Regulador De Caudal Unidireccional En Linea 3/8'	1
77.7		040-RG-00001	Racor Giratorio M-H 1/2"	1
77.8		040-TLL-00001	Tapon De Llenado 1" Con Filtro	1
77.9		120-06-02-00369	Manguera Hidraulica 3/8" Macho 3/8" Tuerca Giratoria 3/8" L=640 mm	1
77.10		040-TVA-00001	Tapon Allen 1/2'	1
77.11		040-FL-00001	Filtro De Aspiracion 1 1/4'	1
77.12		040-RRMM-00011	Racor Reducido 1 1/4'-1/2' Macho Macho	1
77.13		040-RRMM-00004	Racor Reducido 1/2-3/8 Macho Macho	5
77.14		040-TGC-00001	Figura "T" Tuerca Giratoria Central 1/2"	1
77.15		050-ME-00004	Motor Eléctrico DE 9.2 KW A 1400 RPM Brida B5	1

Elemento	Miniatura	Nº de pieza	Descripción	CTDAD
77.16	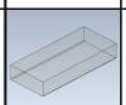	ACEITE C-3006	Aceite Hidraulico C3006 96 Litros	1
77.17.1		040-AE-00002	Acoplamiento Lado Motor 7.5/10/12 Cv	1
77.17.2		040-AE-00003	Acoplamiento Lado Bomba Tipo L 7.5/10/12 Cv	1
77.17.3		040-AE-00004	Estrella Acoplamiento 7.5/10/12 Cv	1
77.18		040-JMG-00004	Junta Metal Goma 3/8' Gas	5
77.19		040-JMG-00001	Junta Metal Goma 1/2" Gas	3
77.20		040-JMG-00002	Junta Metal Goma 1/4" Gas	1
77.21		020-D912-M8X30	Tornillo Allen DIN 912 M8X30	4
77.22		020-D912-M10X20	Tornillo Allen DIN912 M10X20	4
77.23		020-D125B-M10	Arandela Biselada DIN125B Para M10	4
77.24		020-D933-M10X45	Tornillo Hexagonal DIN933 M10X45	4
77.25		020-D912-M10X45	Tornillo Allen DIN 912 M10X45	4
77.26	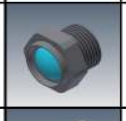	040-NA-00001	Visor Nivel Aceite De 3/8" Gas	1
77.27		040-VDP-00002	Grifo Manometro 1/4" Salida Superior Linea Recto Ref. FT290-01-14	1
77.28	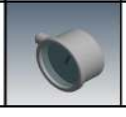	040-MAN-00003	Manómetro 0-300 bar D63 1/4 Inferior	1

Elemento	Miniatura	Nº de pieza	Descripción	CTDAD
77.29		040-VS-00002	Valvula De Secuencia RA03R2B-S	1
77.30		040-TGL-00004	Figura "T" Tuerca Giratoria Lateral 1/2"	1
77.31		040-RMTG-00009	Reducción Macho 1/4" Tuerca Giratoria 1/2"	1
77.32		020-D912-M6X35	Tornillo Allen DIN912 M6X35	4

A10. Electric box

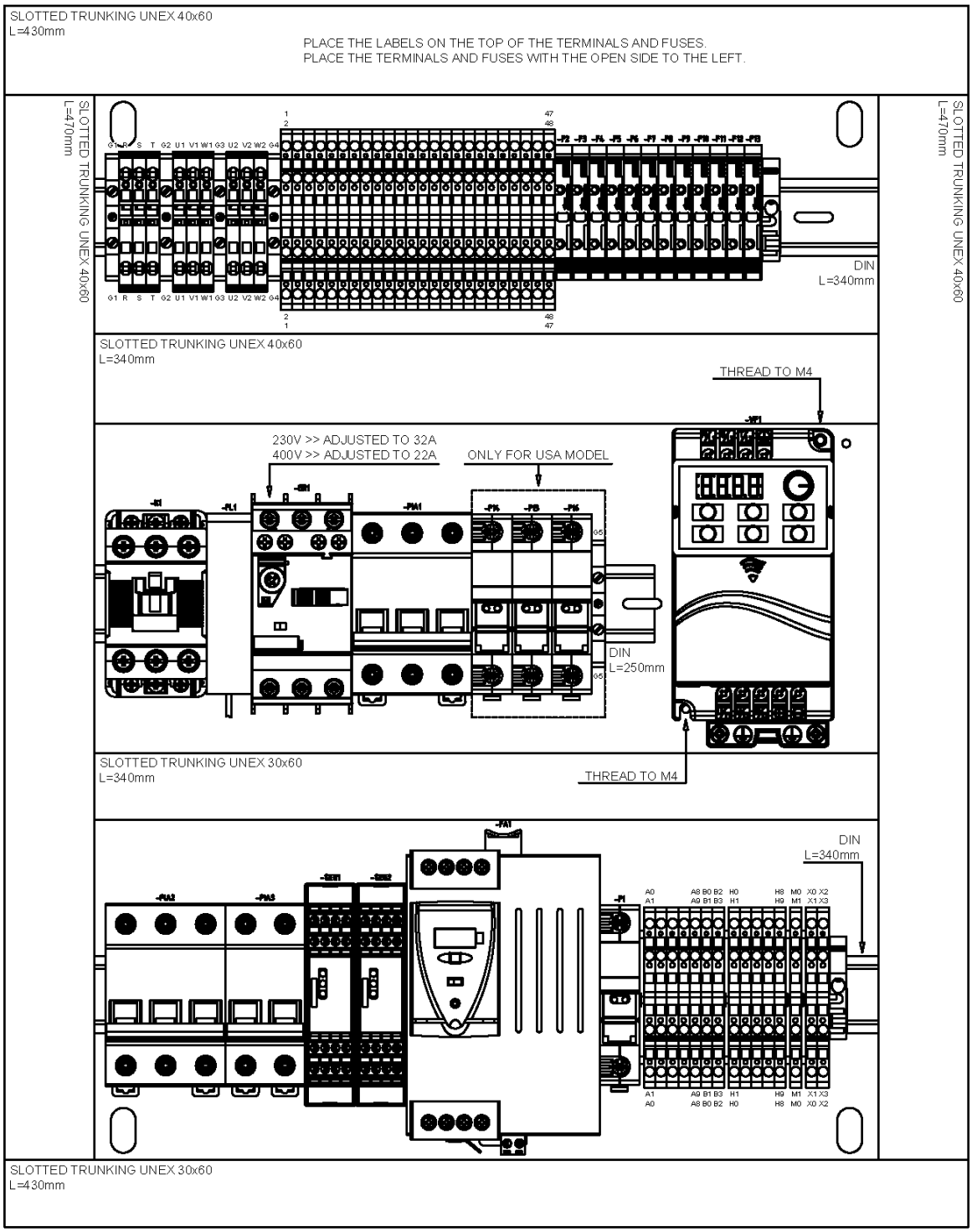

-CONTROL1

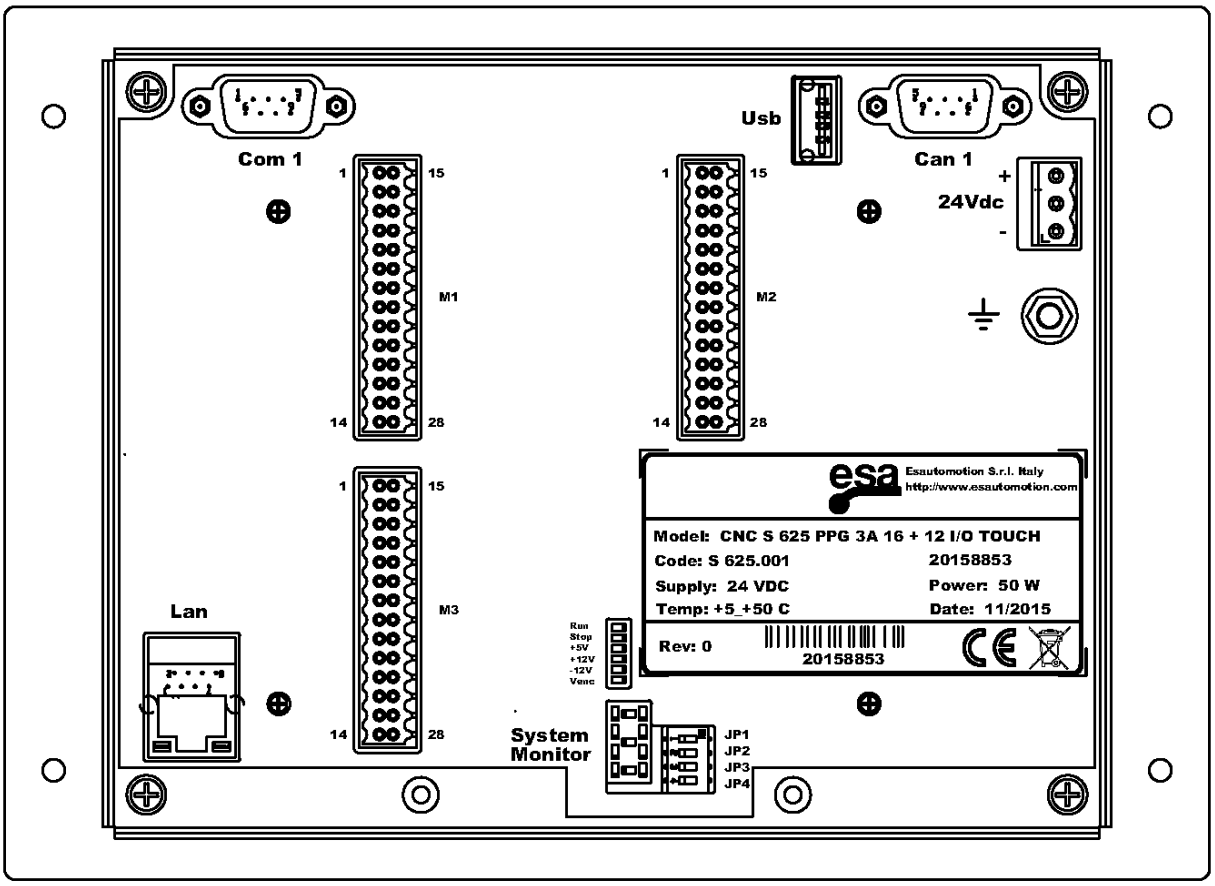
Com 1
Usb
Can 1
24Vdc
+
-
M1
M2
M3
Lan
System
Monitor
Run
Stop
+5V
+12V
-12V
Venc
JP1
JP2
JP3
JP4
esa
Esautomotion S.r.l. Italy
http://www.esautomotion.com
Model: CNC S 625 PPG 3A 16 + 12 I/O TOUCH
Code: S 625.001
20158853
Supply: 24 VDC
Power: 50 W
Temp: +5_+50 C
Date: 11/2015
Rev: 0
20158853

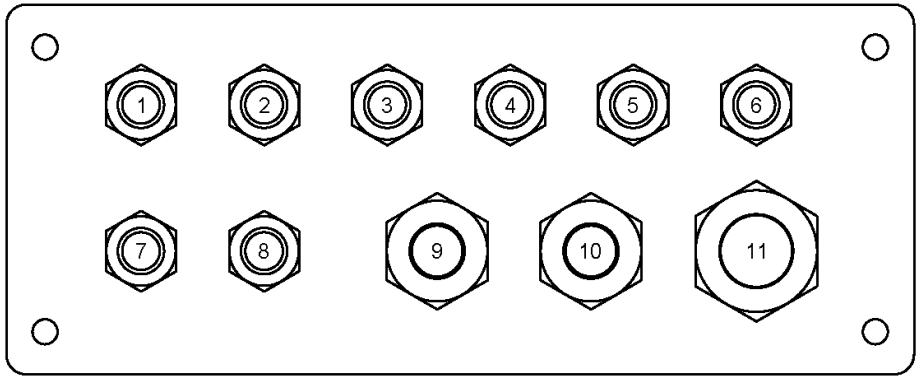

PLATE HOLE NUMBER	PLASTIC CABLE GLAND	ELECTRIC WIRE	DESCRIPTION
1	PG9	---	---
2	PG9	MG14	ITX (X AXIS BACK GAUGE INDUCTIVE)
3	PG9	MG12	EVU (UP ELECTROVALVE)
4	PG9	MG11	EVD (DOWN ELECTROVALVE)
5	PG9	MG4	BR1 (BARRIER RECEIVER)
6	PG9	MG5	BT1 (BARRIER TRANSMITTER)
7	PG9	MG13	FCU (BLADE UP LIMIT SWITCH)
8	PG9	MG16	FCD (BLADE DOWN LIMIT SWITCH)
9	M20	MG3	X AXIS, BACK GAUGE MOTOR
10	M20	---	---
11	M25	MG2	PUMP MOTOR

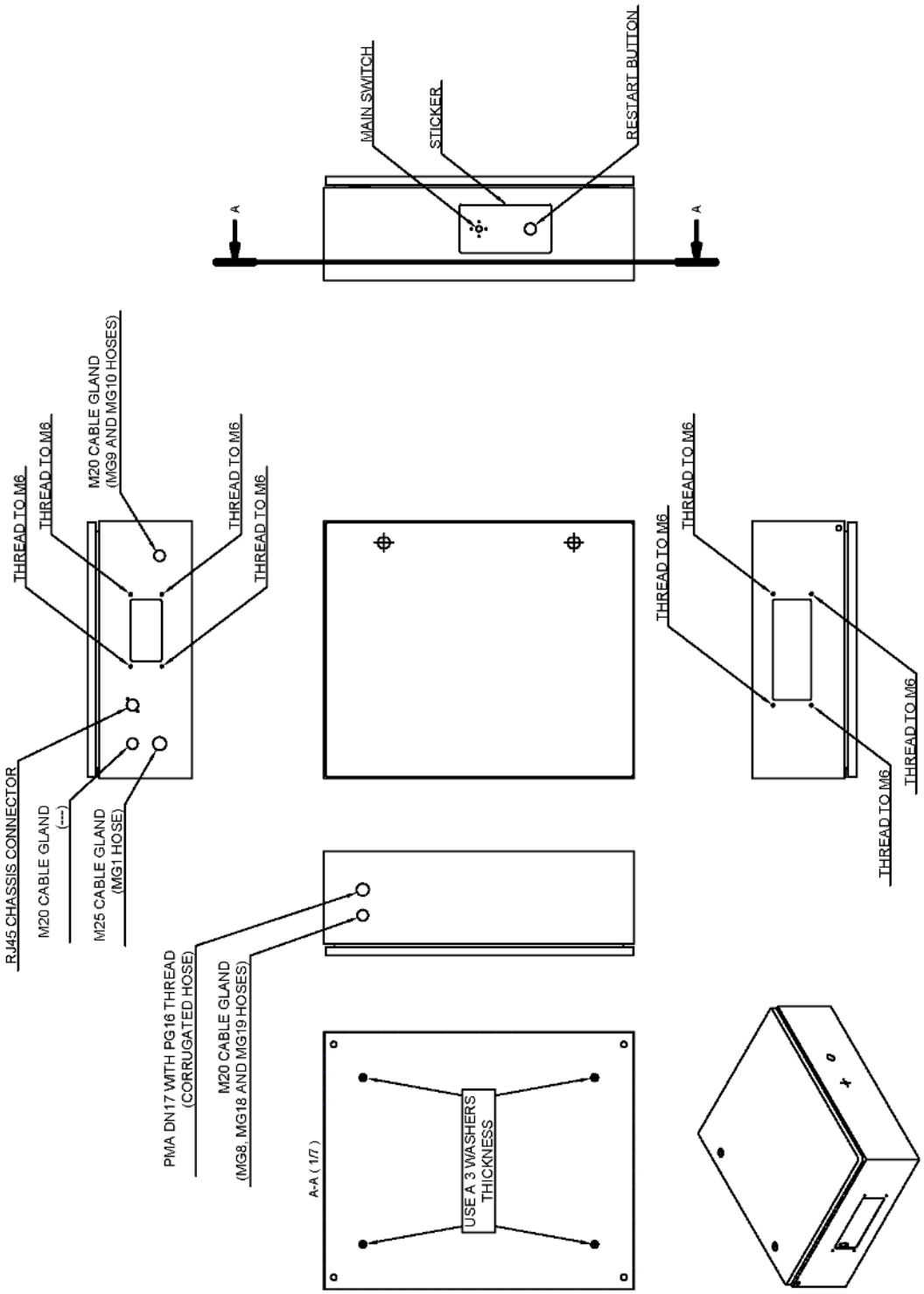
MAIN SWITCH
STICKER
RESTART BUTTON
A
A
THREAD TO M6
THREAD TO M6
M20 CABLE GLAND
(MG9 AND MG10 HOSES)
THREAD TO M6
THREAD TO M6
RJ45 CHASSIS CONNECTOR
M20 CABLE GLAND
(---)
M25 CABLE GLAND
(MG1 HOSE)
THREAD TO M6
THREAD TO M6
THREAD TO M6
THREAD TO M6
PMA DN17 WITH PG16 THREAD
(CORRUGATED HOSE)
M20 CABLE GLAND
(MG8, MG18 AND MG19 HOSES)
A-A (1/7)
USE A 3 WASHERS
THICKNESS

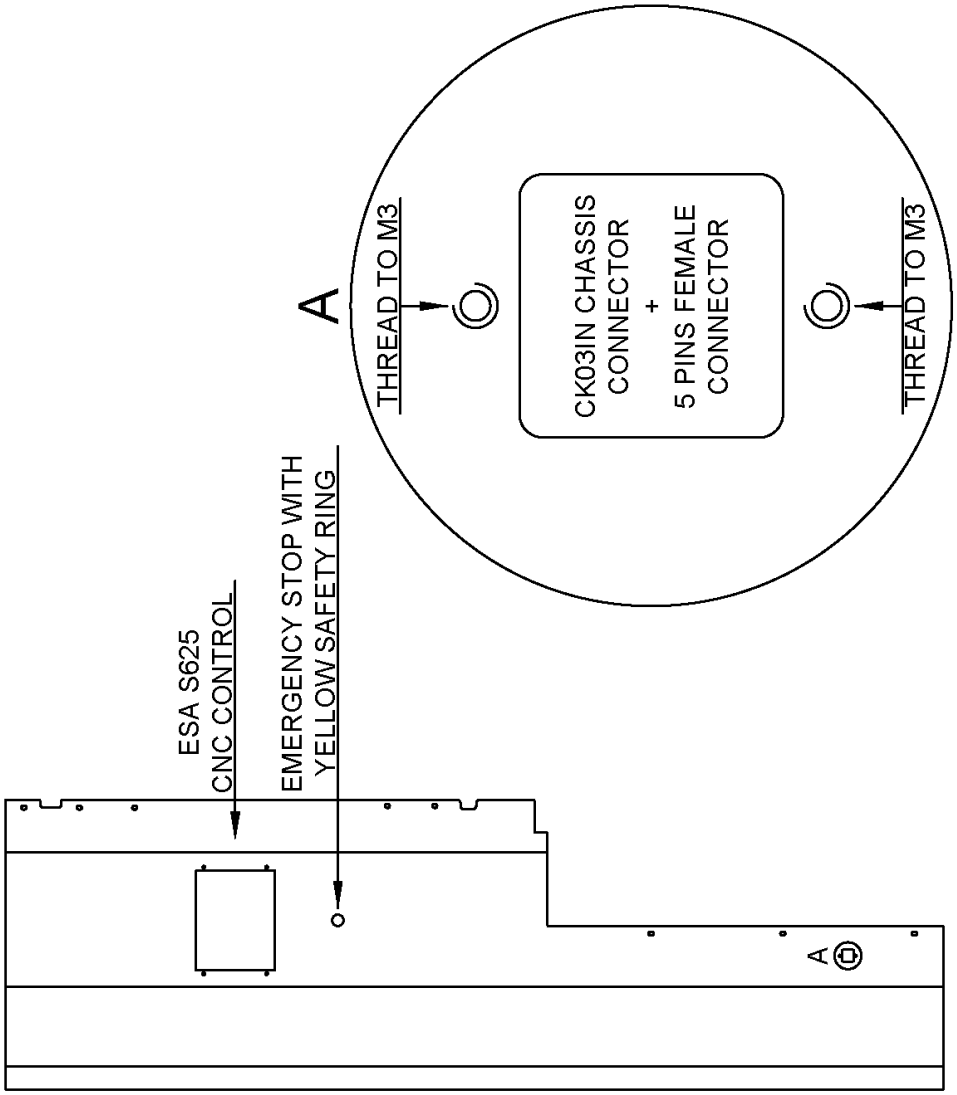
ESA S625
CNC CONTROL
EMERGENCY STOP WITH
YELLOW SAFETY RING
A
THREAD TO M3
CK03IN CHASSIS
CONNECTOR
+
5 PINS FEMALE
CONNECTOR
THREAD TO M3
A

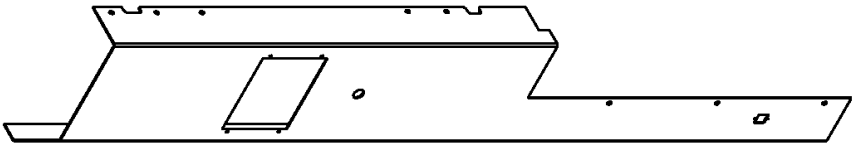

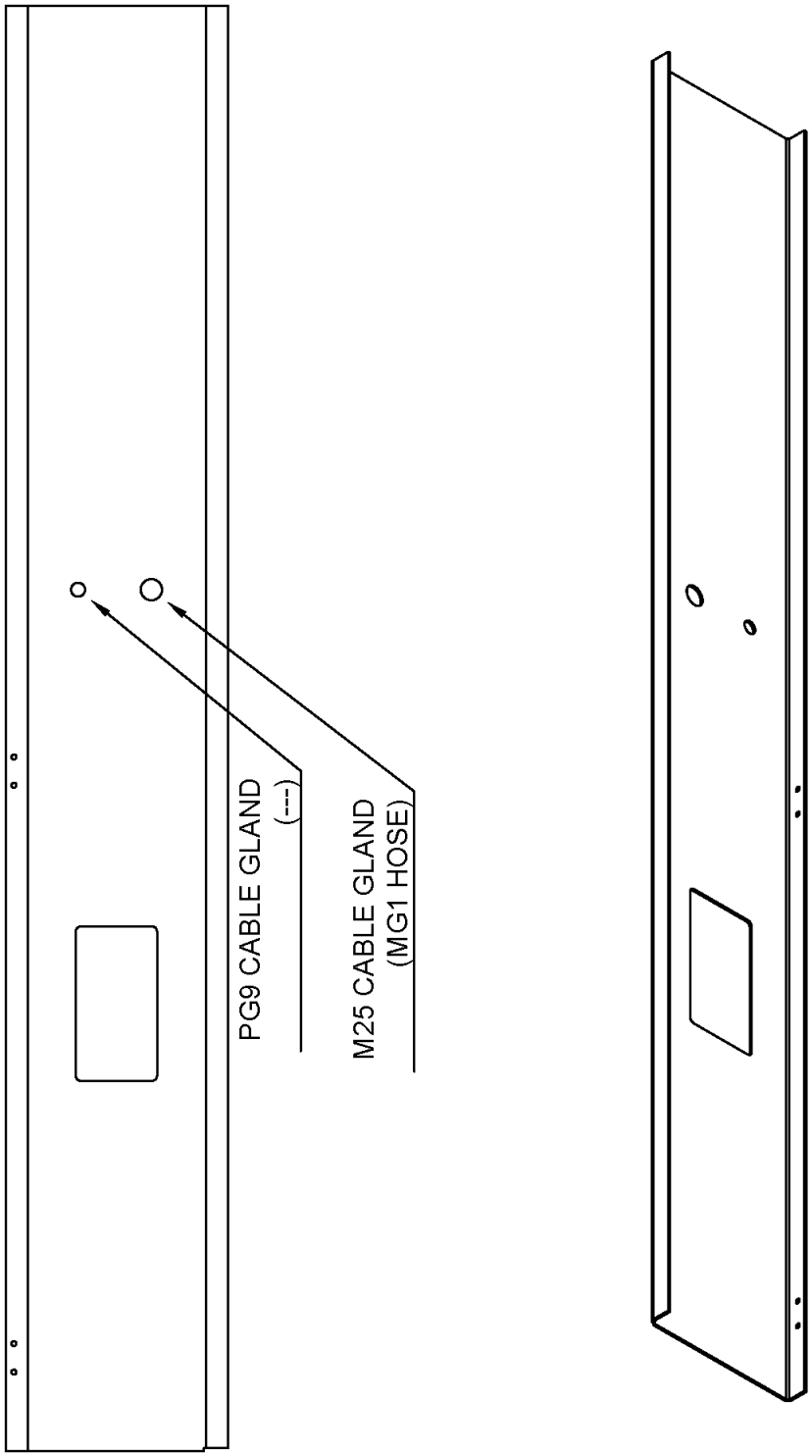
PG9 CABLE GLAND
(---)
M25 CABLE GLAND
(MG1 HOSE)

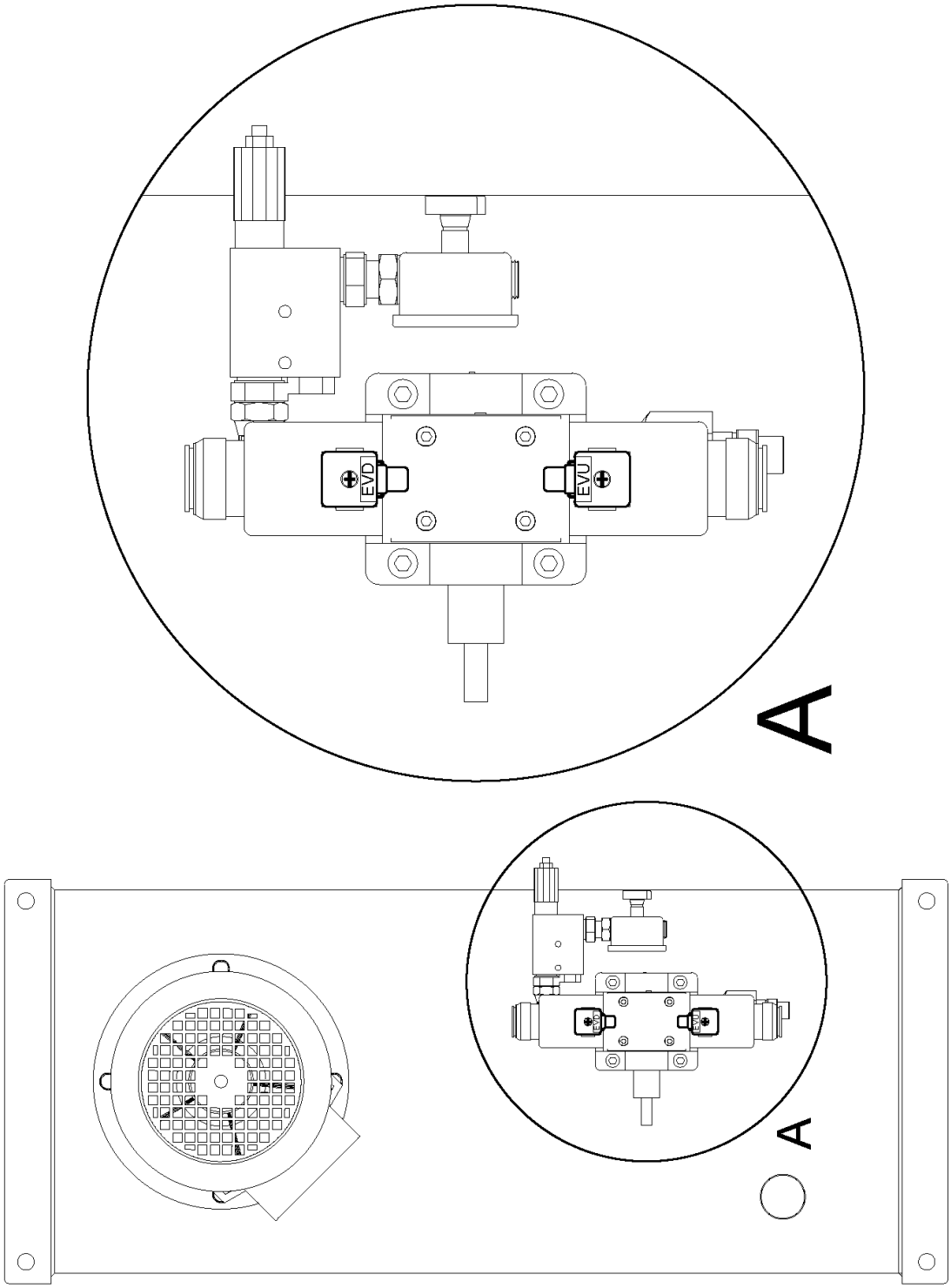
EVD
EVU
A
A

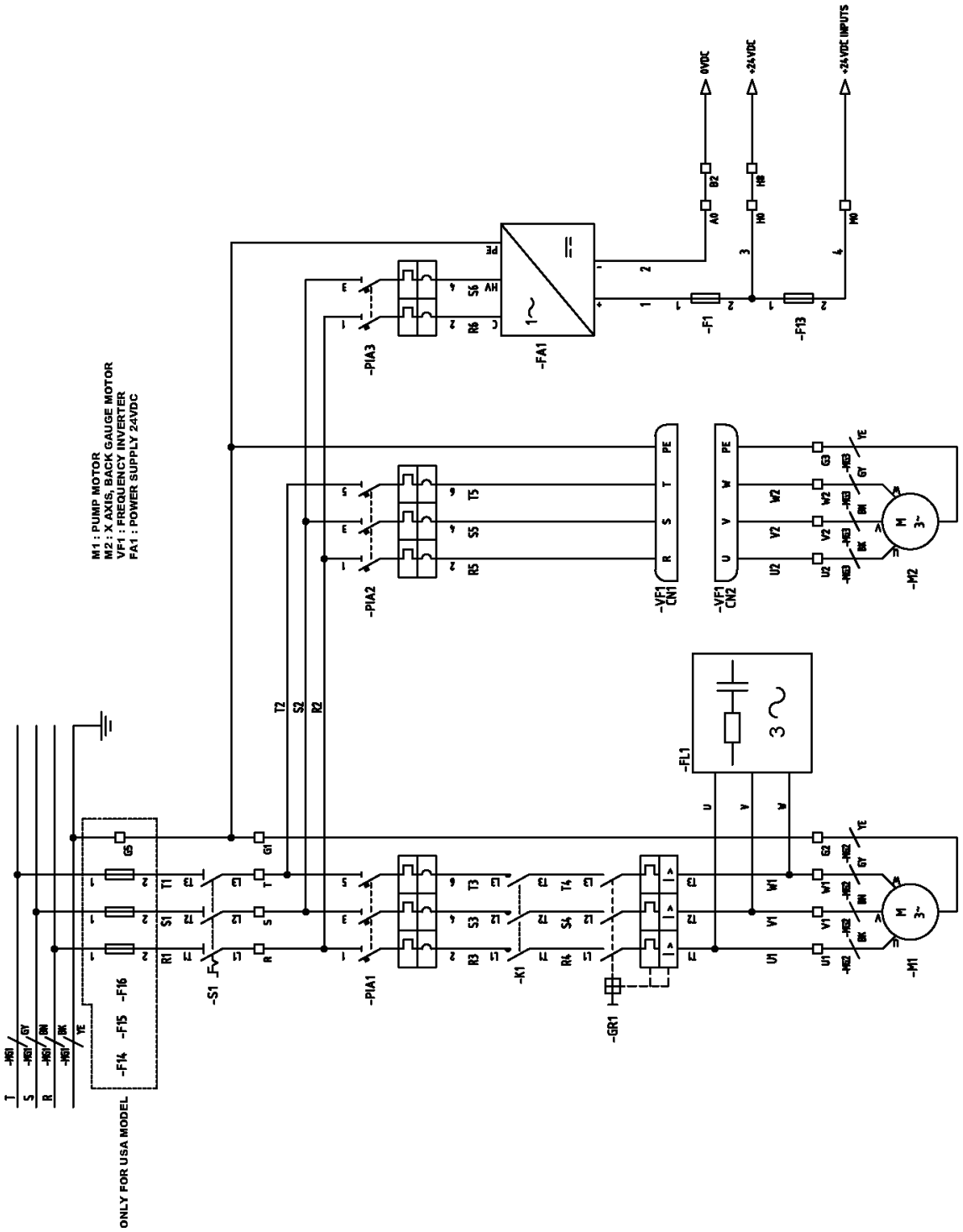
M1 : PUMP MOTOR
M2 : X AXIS, BACK GAUGE MOTOR
VF1 : FREQUENCY INVERTER
FA1 : POWER SUPPLY 24VDC
ONLY FOR USA MODEL
-F14 -F15 -F16
-S1
-PIA1
-PIA2
-PIA3
-K1
-GR1
-FL1
-M1
-M2
-VF1 CN1
-VF1 CN2
-FA1
-F1
-F13
0VDC
+24VDC
+24VDC INPUTS

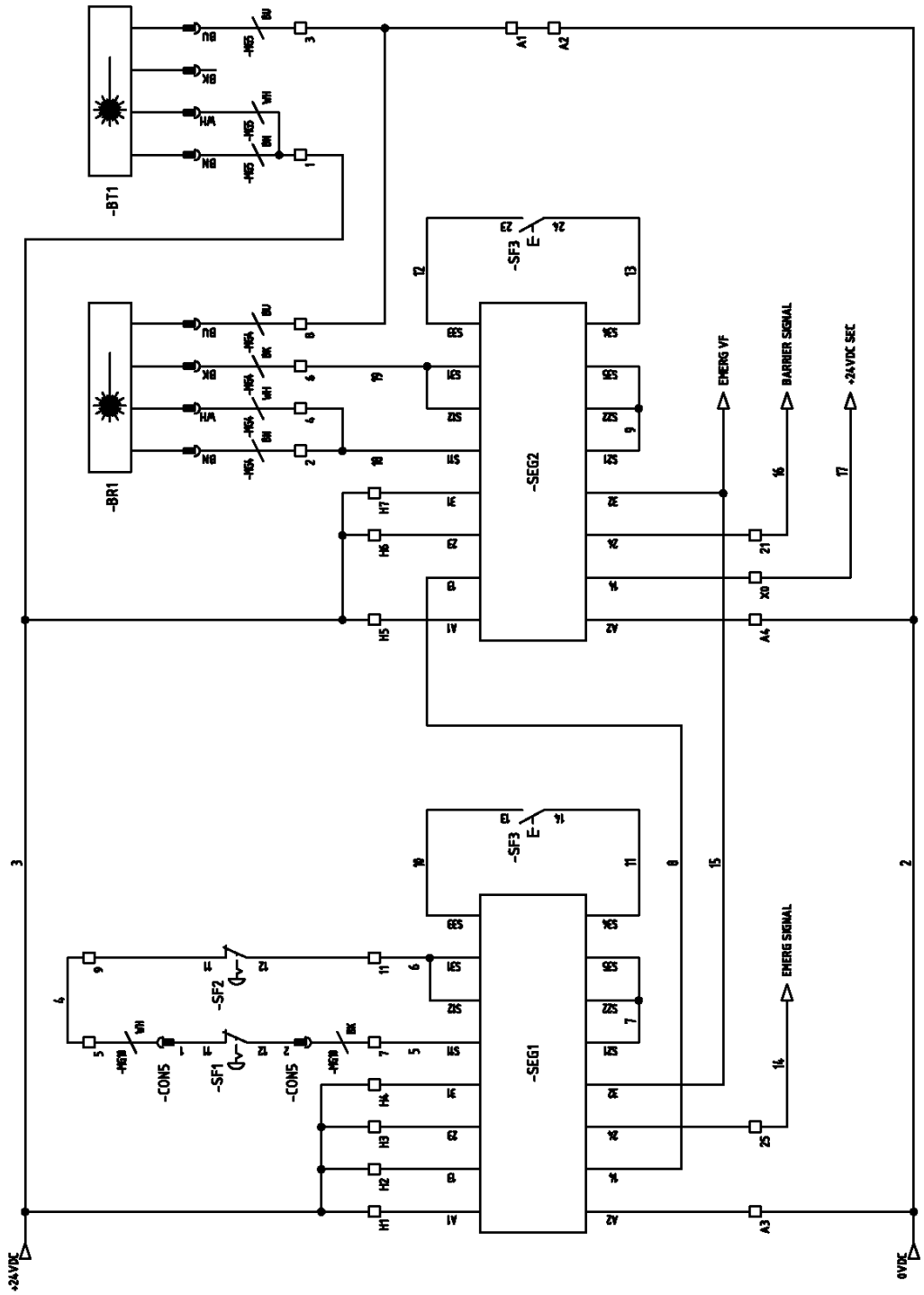

SF1 : PEDAL EMERGENCY STOP
SF2 : FRONT EMERGENCY STOP
SF3 : RESTART BUTTON
BR1 : BARRIER RECEIVER
BT1 : BARRIER TRANSMITTER

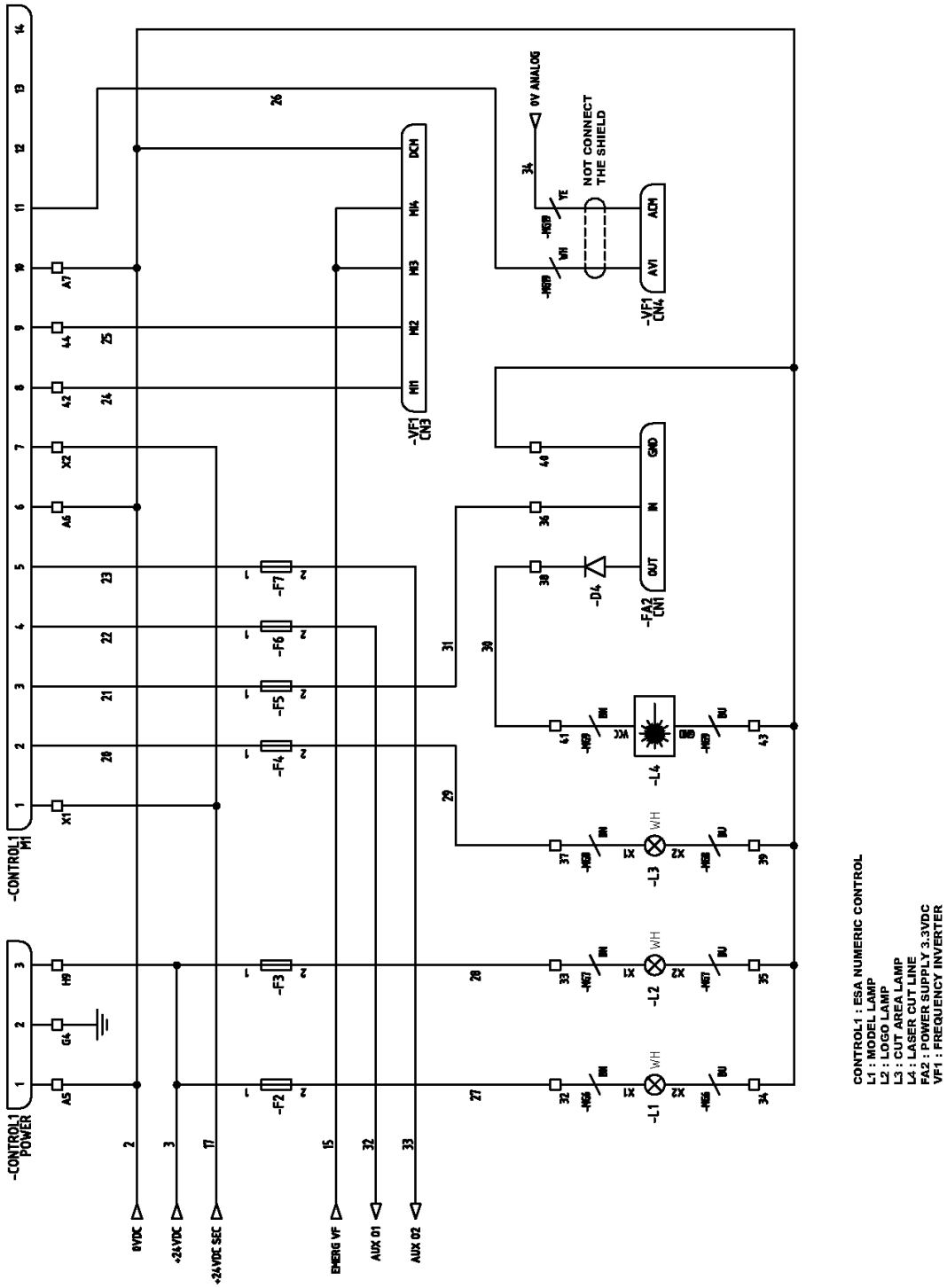
-CONTROL1 POWER
-CONTROL1 M1
-VF1 CN3
-VF1 CN4
-FA2 CN1
0V ANALOG
NOT CONNECT THE SHIELD
0VDC
+24VDC
+24VDC SEC
EMERG VF
AUX 01
AUX 02
CONTROL1 : ESA NUMERIC CONTROL
L1 : MODEL LAMP
L2 : LOGO LAMP
L3 : CUT AREA LAMP
L4 : LASER CUT LINE
FA2 : POWER SUPPLY 3.3VDC
VF1 : FREQUENCY INVERTER

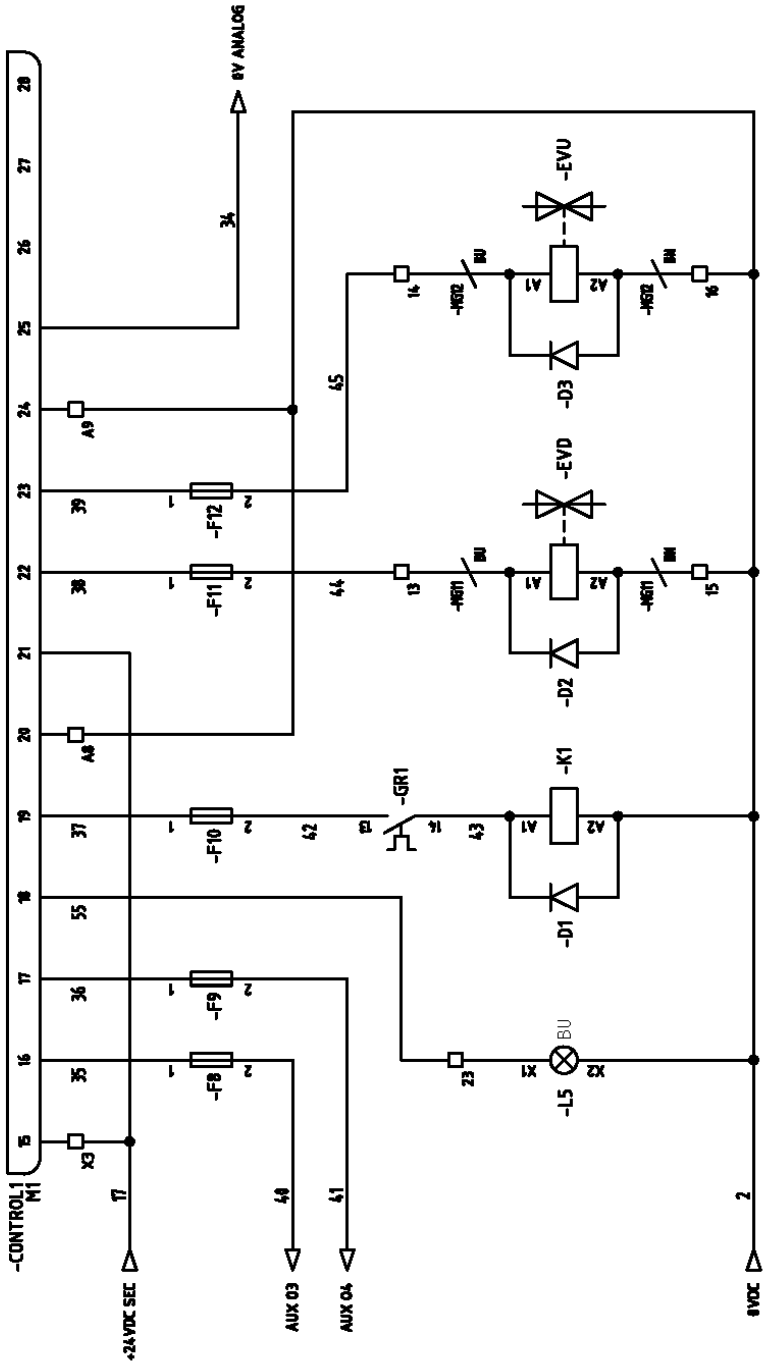
-CONTROL1
M1
+24VDC SEC
AUX 03
AUX 04
0V ANALOG
0VDC
-F8
-F9
-F10
-F11
-F12
-GR1
-K1
-D1
-D2
-D3
-EVD
-EVU
-L5
-HG01
-HG02
-HG11
-HG12
BU
BN
CONTROL1 : ESA NUMERIC CONTROL
L5 : RESTART LAMP
K1 : PUMP CONTACTOR
EVD : DOWN ELECTROVALVE
EVU : UP ELECTROVALVE

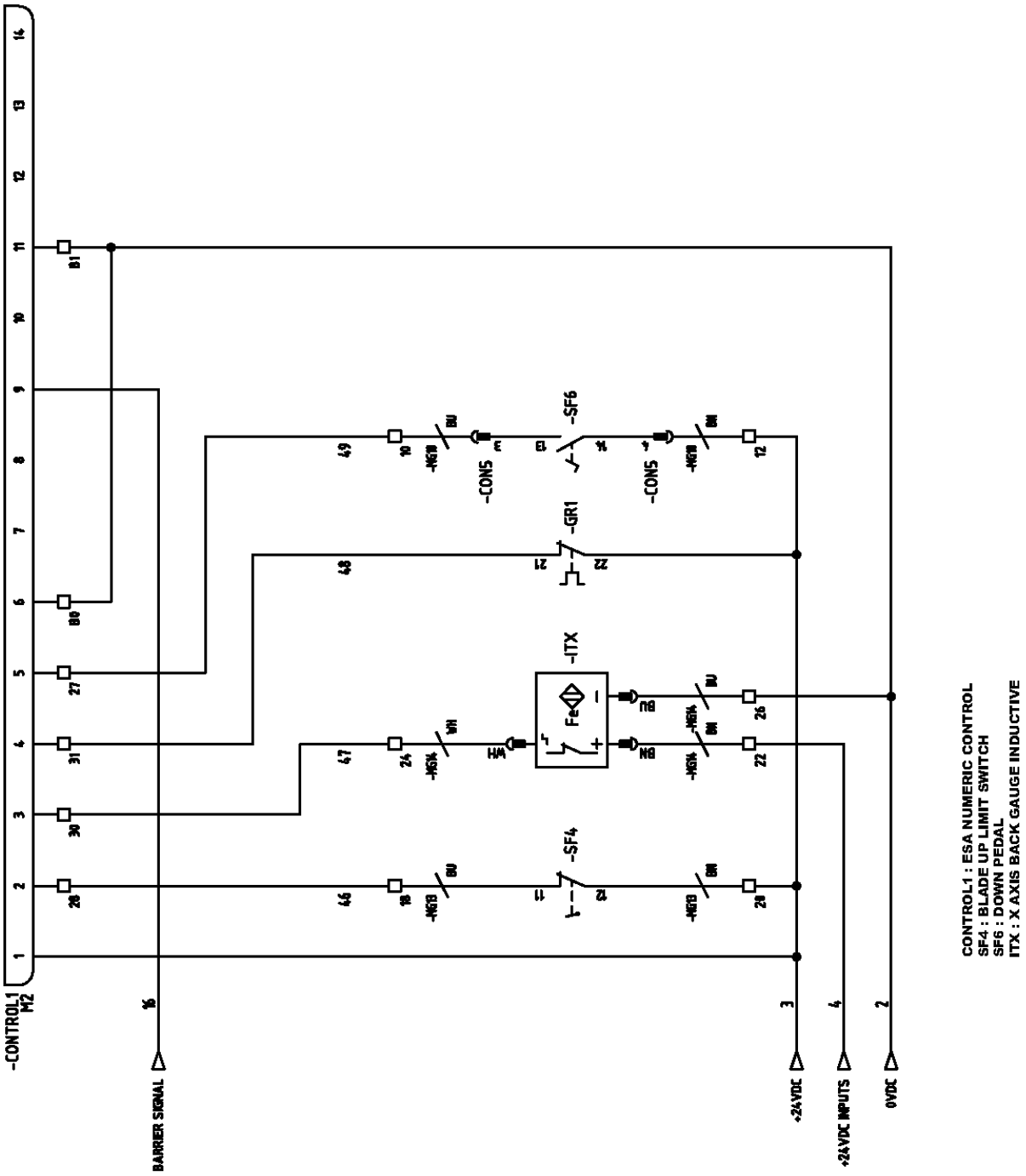
-CONTROL1
M2
BARRIER SIGNAL
+24VDC
+24VDC INPUTS
0VDC
-SF4
-SF6
-GR1
-ITX
-CONS
CONTROL1 : ESA NUMERIC CONTROL
SF4 : BLADE UP LIMIT SWITCH
SF6 : DOWN PEDAL
ITX : X AXIS BACK GAUGE INDUCTIVE

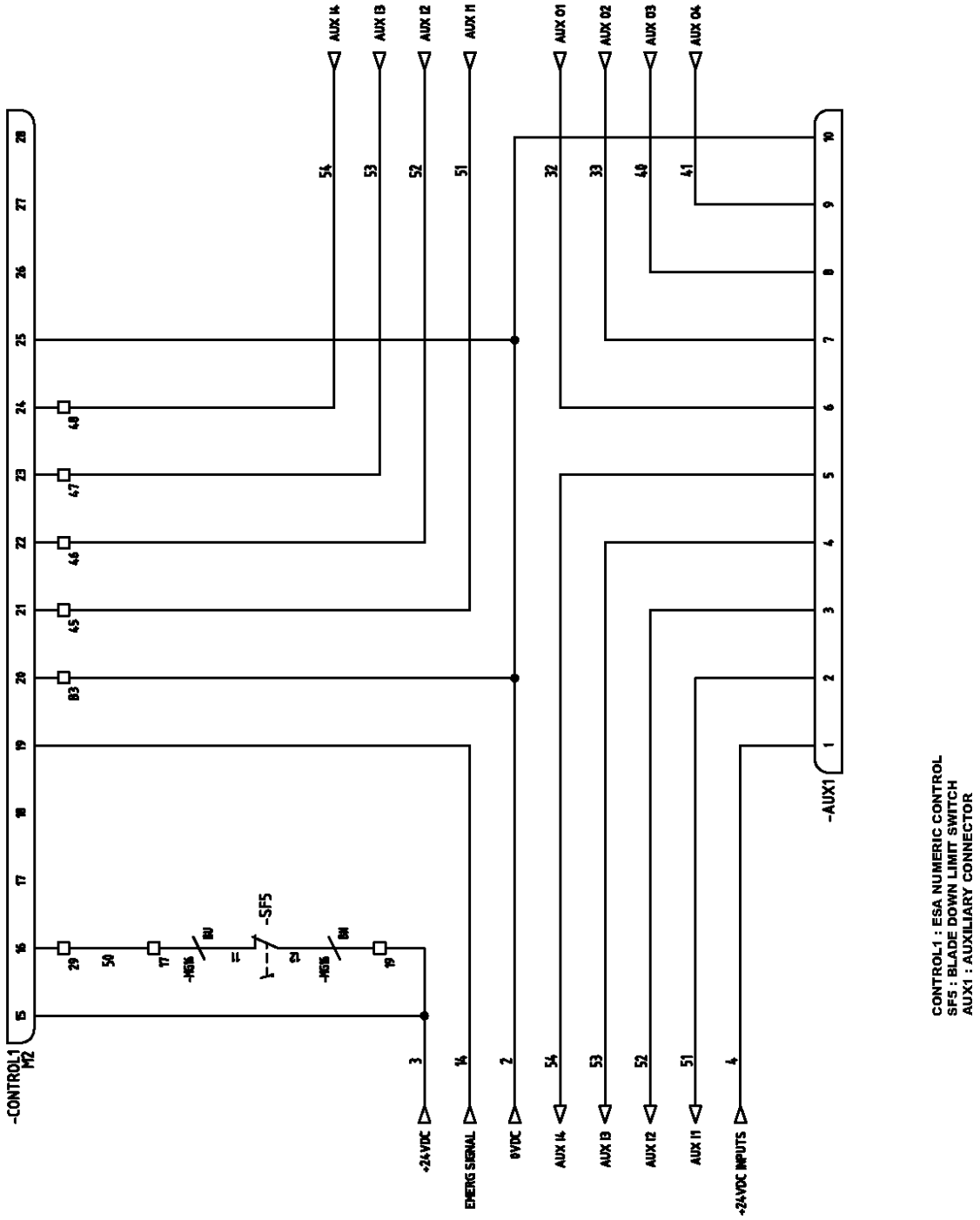
-CONTROL1
M2
-SF5
-AUX1
+24VDC
EMERG SIGNAL
0VDC
AUX I4
AUX I3
AUX I2
AUX I1
+24VDC INPUTS
AUX O1
AUX O2
AUX O3
AUX O4
CONTROL1 : ESA NUMERIC CONTROL
SF5 : BLADE DOWN LIMIT SWITCH
AUX1 : AUXILIARY CONNECTOR

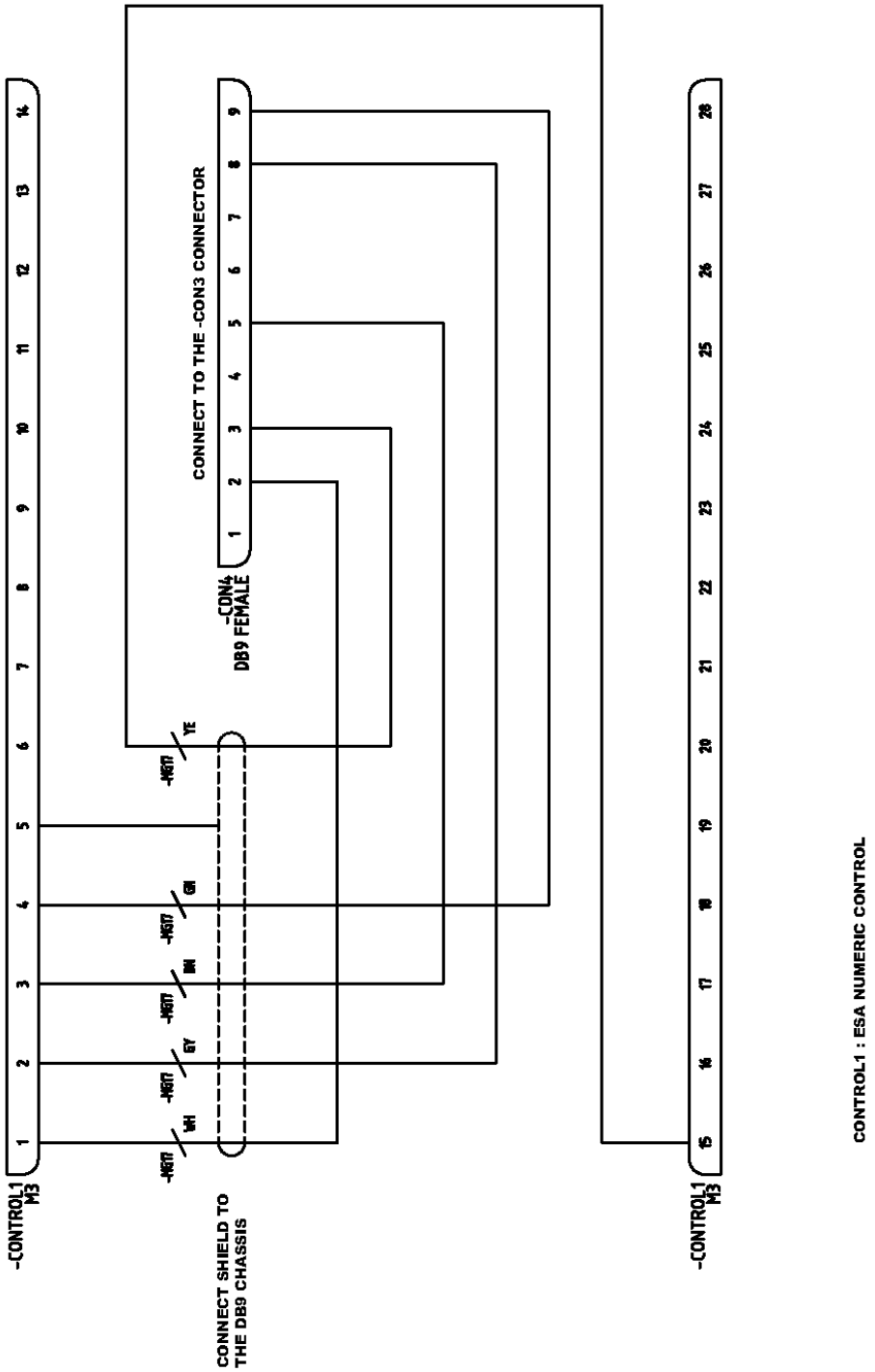
-CONTROL1
M3
-MG17
WH
-MG17
GY
-MG17
BN
-MG17
GN
-MG17
YE
CONNECT SHIELD TO
THE DB9 CHASSIS
-CON4
DB9 FEMALE
CONNECT TO THE -CON3 CONNECTOR
-CONTROL1
M3
CONTROL1 : ESA NUMERIC CONTROL

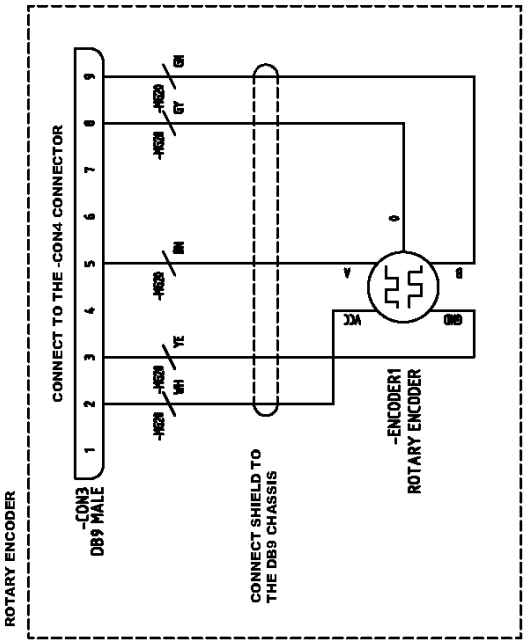
ROTARY ENCODER
CONNECT TO THE -CON4 CONNECTOR
-CON3
DB9 MALE
CONNECT SHIELD TO
THE DB9 CHASSIS
-ENCODER1
ROTARY ENCODER

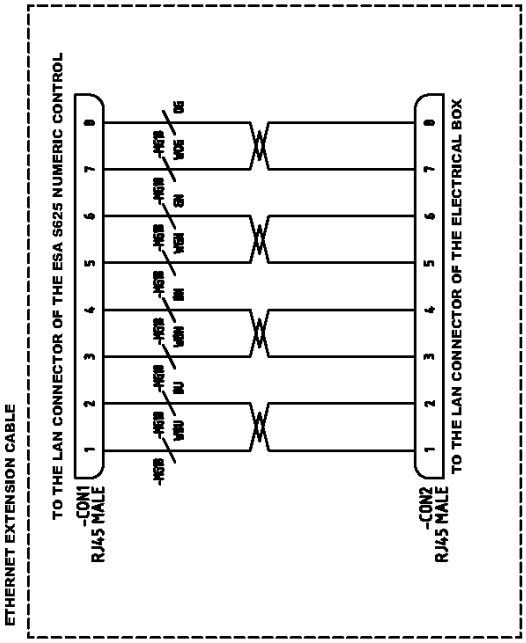
ETHERNET EXTENSION CABLE
TO THE LAN CONNECTOR OF THE ESA S625 NUMERIC CONTROL
-CON1
RJ45 MALE
-CON2
RJ45 MALE
TO THE LAN CONNECTOR OF THE ELECTRICAL BOX

A3. Hydraulic map

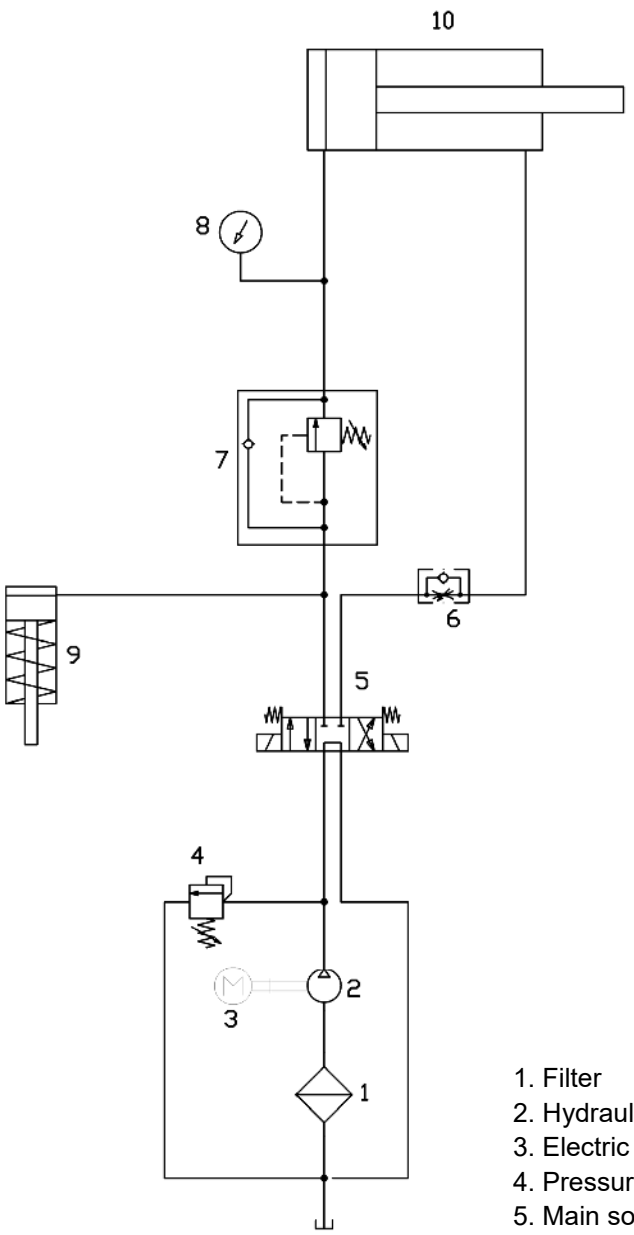

1. Filter
2. Hydraulic pump
3. Electric motor
4. Pressure control valve
5. Main solenoid
6. Unidirectional flow regulator
7. Sequence valve
8. Manometer
9. Rammers
10. Main cylinder

ESQUEMA HIDRAULICO C3006/2006 NG	Ref.	Und.	Nº Desp.	Nombre	Fecha
	Num.		Dibujado	Tecnico 20	21-02-2019
Material		Medida corte mm	Verificado		
Revestimento	Tratamiento				
Color	Peso	Tol. general	Maq. CIZALLAS NG		

NARGESA®
Ctra. de Gerrigós s. Sant Miquel s/n 17476 Palau sta. Eulàlia (Girona)
http://www.nargesa.com

Este plano es propiedad de Prada Nargesa SL. No podrá ser reproducido, comunicado a terceros o utilizado para otro fin que no sea el acordado sin su permiso escrito.

OUR RANGE OF MACHINERY

IRON WORKERS

SECTION BENDING MACHINES

NON-MANDREL PIPE BENDER

HORIZONTAL PRESS BRAKE

TWISTING/SCROLL BENDING MACHINES

HYDRAULIC PRESS BRAKES

HYDRAULIC SHEAR MACHINES

GAS FORGES

IRON EMBOSSING MACHINES

END WROUGHT IRON MACHINES

BROACHING MACHINES

POWER HAMMERS

PRESSES FOR LOCKS