GAS FORGE

H2

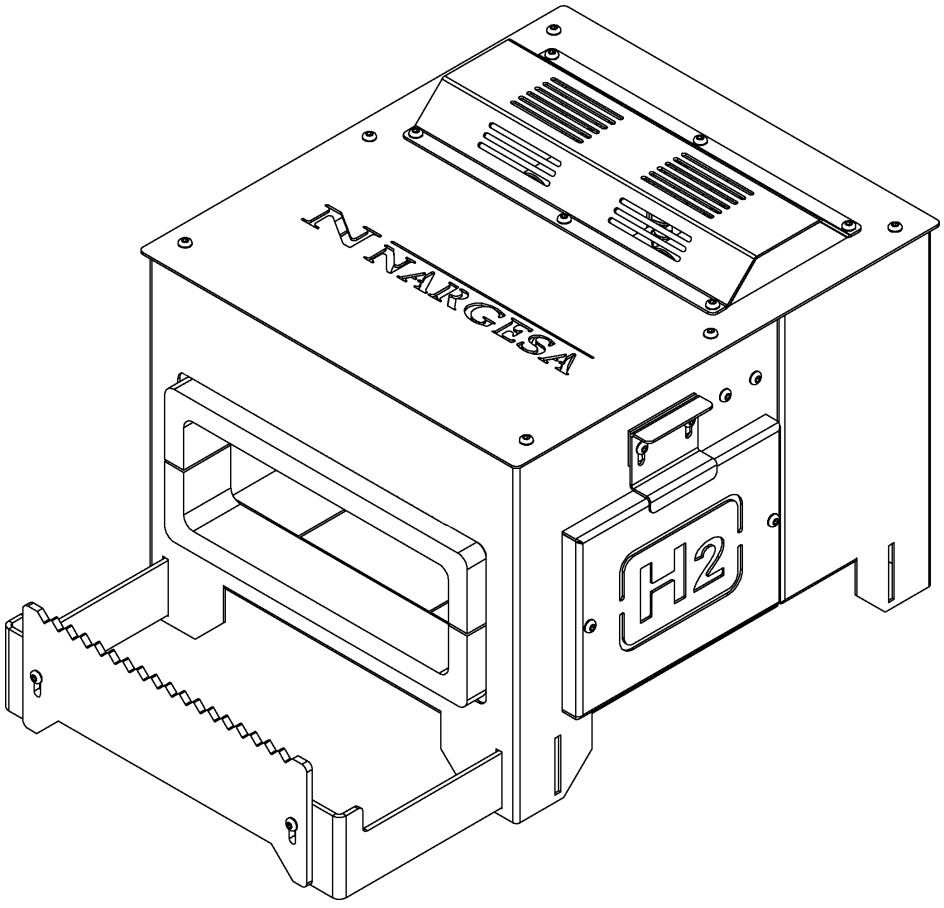

INSTRUCTIONS BOOK

PRADA NARGESA, S.L

Ctra. de Garrigàs a Sant Miquel s/n · 17476 Palau de Santa Eulàlia (Girona) Spain

Tel. +34 972568085 · nargesa@nargesa.com · www.nargesa.com

Thank you for choosing our machines

www.nargesa.com

INDEX

1. MACHINE INFORMATION 3
1.1. Identification of the machine 3
1.2. Dimensions 3
1.3. Description of the machine 3
1.4. Fuel for the furnace 4
1.5. Identification of elements 5
1.6. Description of elements 6
1.6.1. Openings 6
1.6.2. Burners 6
1.6.3. Thermocouple 7
1.7. General Features 8
2. TRANSPORT AND STORAGE 9
2.1. Transport 9
2.2. Storage conditions 9
3. MAINTENANCE 10
3.1. General maintenance 10
3.2. Change of the insulating material of the furnace 11
4. HANDLING BOOK 16
4.1. Gas valve 16
4.2. Pushbuttons 16
4.3. Pressure controller and manometer 16
5. INSTALLATION AND SET UP 17
5.1. Location of th machine 17
5.2. Dimensions and work área 17
5.3. Admissible external conditions 17
5.4. Set up 18
5.5. Openings 18
5.6. Adjustment of the material support position 19
5.7. First set up of furnace 20
5.8. Ignition of the furnace 22
5.9. Shutdown of the furnace 22
6. POSSIBLE BREAKDOWNS 23
7. WARNINGS 24
7.1. Hazard wastes 24
7.2. Protection elements for the operator 24

TECHNICAL ANNEX

1. MACHINE INFORMATION

1.1. Identification of the machine

Brand	NARGESA
Type	Furnace
Model	H2

1.2. Dimensions

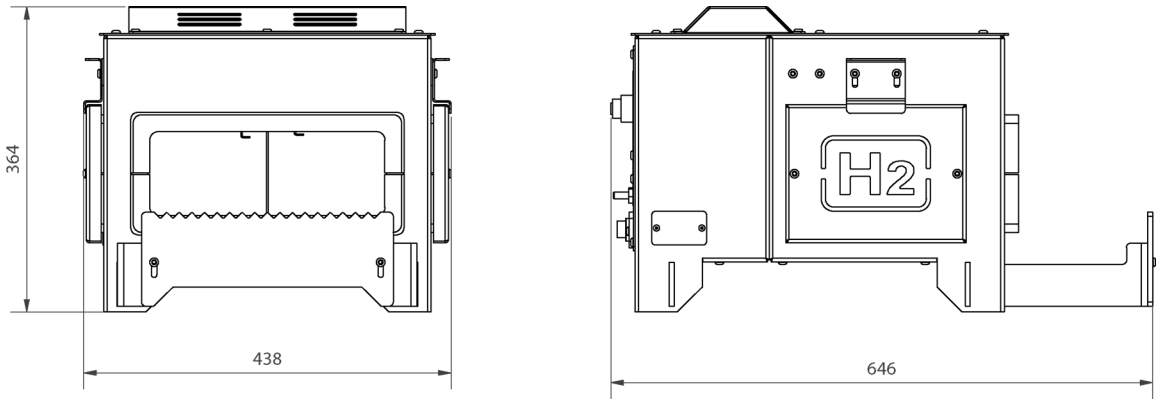

Picture 1. External dimensions of the Furnace H2

1.3. Machine description.

The H2 Furnace is an oven designed to heat metal profiles of different thicknesses and shapes. The furnace H2 allows us to heat parts up to a temperature of 1300ºC.

The oven is composed of three elements (supplied by Nargesa): the oven, the **Gas hose** and the **Pressure regulator**. This type of installation will never be modified, in No Case.

The oven is equipped with two **Burners** for propane gas (LPG), independent.

The ignition of the oven is electronic.

The ovens designed and manufactured in Nargesa comply with the regulations in force in Spain, concerning to the Regulation of appliances that use gas as fuel RD919 / 2006.

1.4. Fuel to be used with this foerge

COMPOSITION AND INFORMATION: PROPANE GAS G.L.P.	
Chemical nature	Blend of Hydrocarbones
Synonyms	Gas de cocina - Gas licuado de petróleo
Ingredients	Propane Butane Ethane Penthane

IDENTIFICATION OF HAZARDS	
Main hazards	
Physical and chemical hazards	Flammable gas
Specific hazards	Suffocating and flammable gas
Product effects	
Adverse effects on human health	Suffocating product
Major Synthoms	Inhalation may cause dizziness.

MEASURES TO FIGHT FIRES	
Proper fire extintion means	Water mist, chemical dust and carbón dioxide (CO2).
Specific hazards	It could be lit with heat, sparks or flsmess. Steams could travel up to the ignition source and return like flames. Keep out of container tanks.
Special methods	Remove containers from the fire zone, if this could be a riskless fact. Spray with wáter mist the containers exposed to fire. This devide should be remotely controlled, and so after the fire extintion. Fight the fire aains the wind direction, whenever it is posible. Do not extinguish fire before stopping the leak. In case the fire is intense in loaded areas, use hoses with holders to be used remotedly. Then if thi could not be done, just leave the área and let it burn.
Special Protection to fight against fires.	In closed places, use complete protection against fire and autonomous equipment to protect the respiratory tract.

WARNING!
Consult your supplier's gas safety data card, before its use.
Strictly follow your supplier's safety protocols.

1.5. Identification of elements

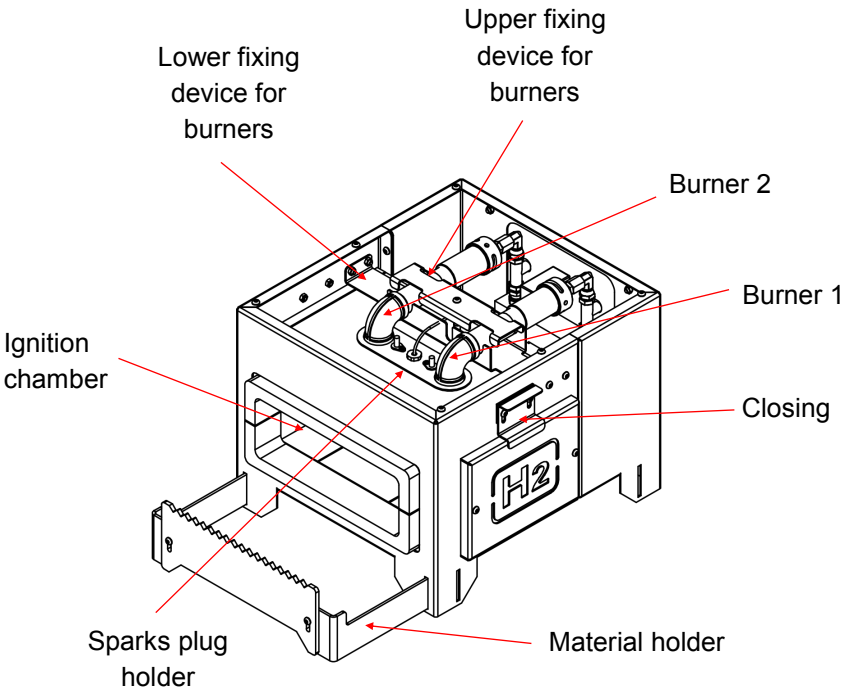

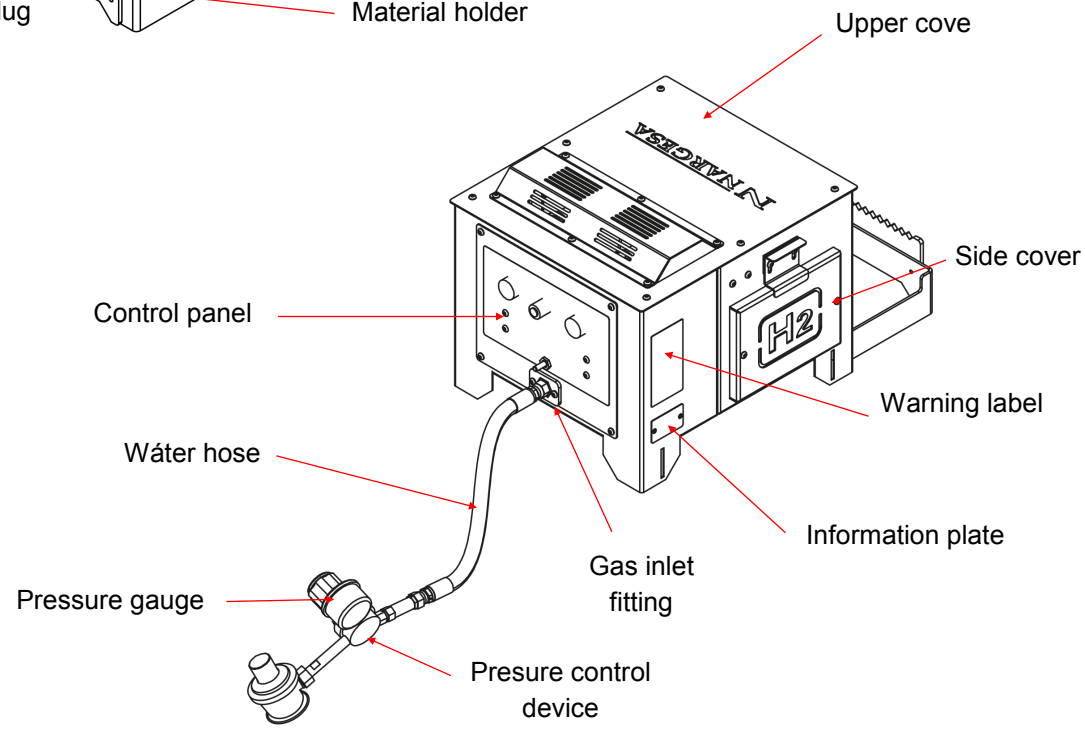

The ***Adapter*** for the gas bottle is NOT provided along with the furnace because of the major differences according to each country.

The Adapter must be equipped with a male thread 21,8 left.

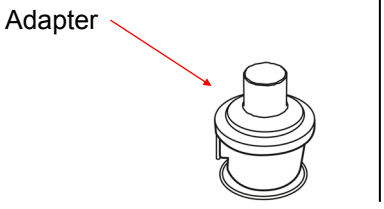

1.6. Description of elements

1.6.1. Openings

The furnace has three openings:

- The front opening is the one usually used, since it is the widest.
- Side openings are used to heat longer bars. If we want to heat a larger length of bar we will open only a lateral opening. If we want to heat an intermediate part of the bar we will open the two lateral openings of the oven so that the bar can pass through the inside of the oven and thus be able to heat the desired part

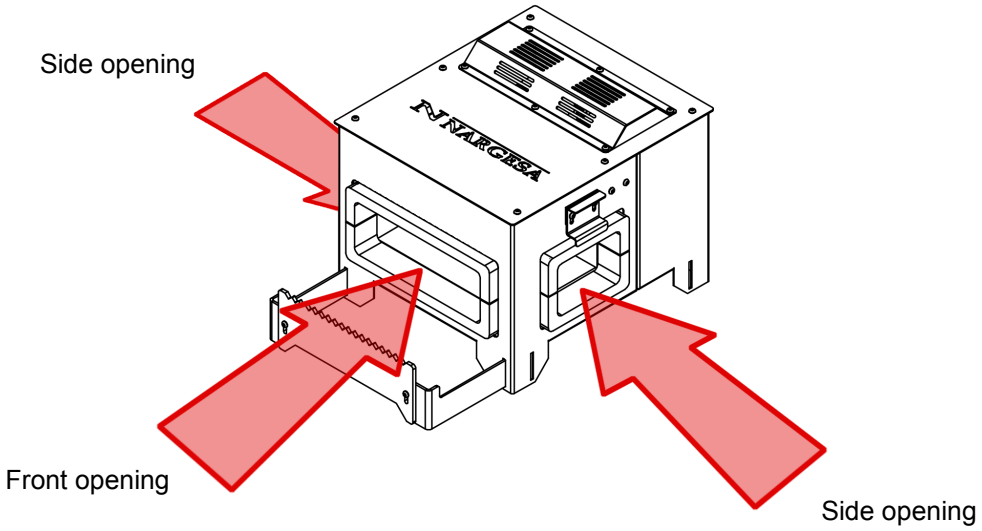

Picture 2. Furnace openings

1.6.2. Burners

The burners of Nargesa's Furnaces has been manufactured by Nargesa and designed exclusively to be used on the furnaces H1, H2 and H3.

- Type of burner: Athmospheric
- Maximum supply pressure: 1,5 Bar
- Fuel: Propane gas GLP
- Power: 4 Kw

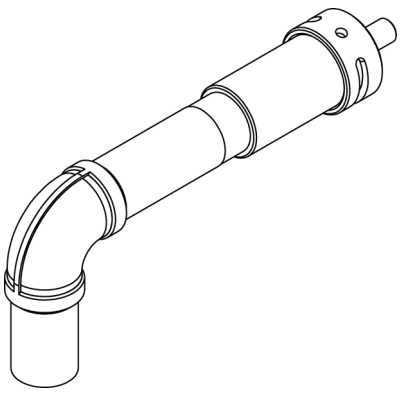

Picture 3. Furnace burner

1.6.3. Thermocouple

The thermocouple is the sensor to measure the temperature. It consists of two different metals, joined at one end. When the union of the two metals is heated or cooled, it produces a voltage proportional to the temperatura which causes the safety valve to open or close.

The thermocouple safety valve consists of two parts: The valve and the thermocouple

The valve is equipped with the **Thermocouple pushbutton** for ignition of the furnace.

In the process of ignition of the furnace we press this button to allow the passage of gas. When the thermocouple gets enough temperature, we will release this pushbutton and the gas will continue to pass through the valve. This valve will remain open while the oven is in operation and the thermocouple will keep the working temperature.

Once the oven is switched off, and in a time interval of less than 2 minutes, the thermocouple cools and stops acting on the closing safety valve, thus preventing the passage of gas

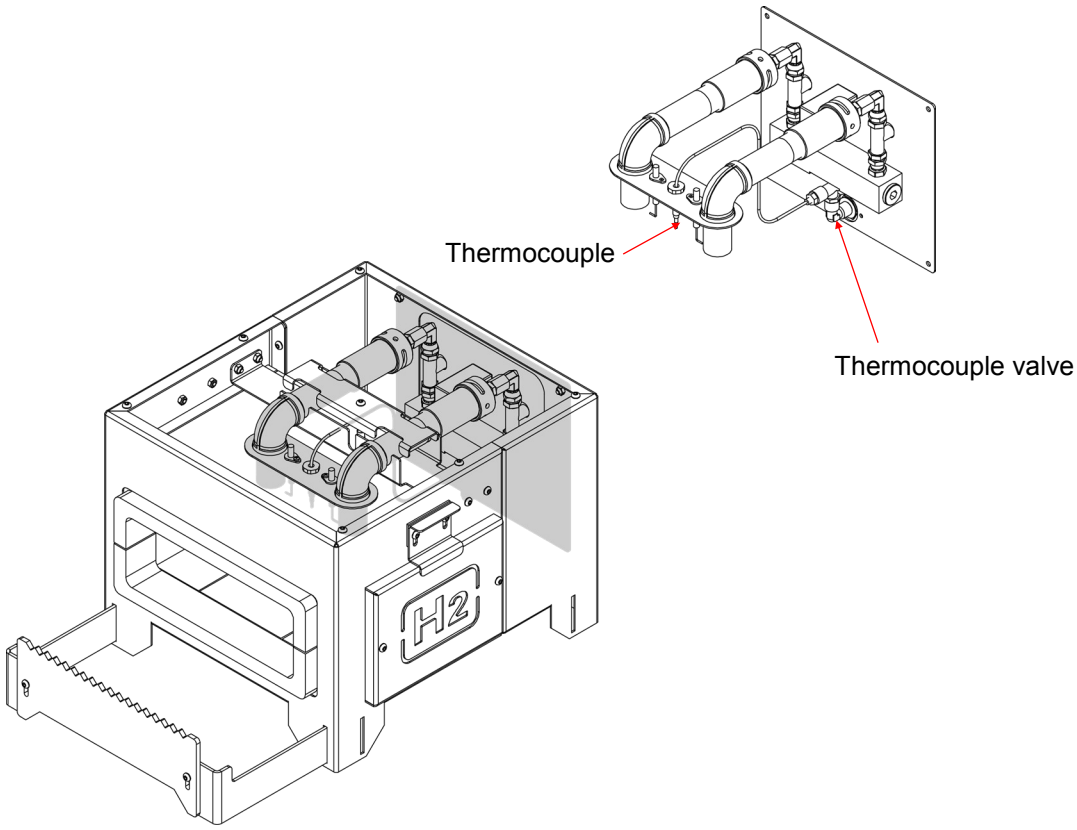

Picture 4. Thermocouple set

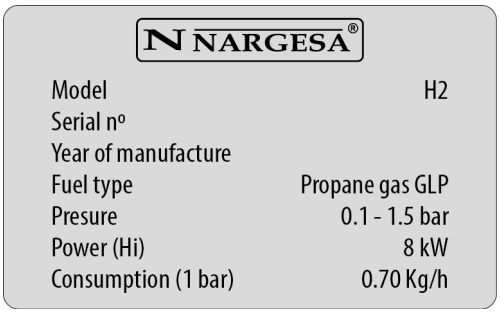

Picture 5. Information plate

1.7. Main features

Dimensions of combustion chamber	324x240x100 mm
Maximum temperature	1300 ºC
Nr of burners	2
Type of fuel	Propane gas (GLP)
Adjustable working pressure	0.1 - 1.5 bar
Power (Hi)	8 kW
Gas intake as 1 per bar	0.7 Kg/h
External dimensions	500x440x365 mm
Weight	38 Kg

2. TRANSPORT AND STORAGE

2.1. Transport

The transport of the furnace must be done by its lower side. Lifting it upwards with both hansnd.

Do not transport the furnace in any other way since it could be damaged.

WARNING:

In order to move the gadget it is necessary that all burners a re OFF and wait 24 hours to make sure the isolating material is at room temperature.

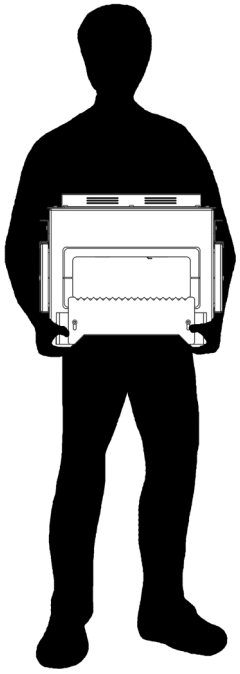

Picture 6. Transport of the machine

2.2. Storage conditions

The furnace cannot be stowed in a place that does not meet the following requirememts:

- Humidity between 30% and 95%
- Temperaturre from -25 to 55ºC or 75ºC pfor periods not exceeding 24 hours 24h (keep in mind these temperaturas are for storage conditions)
- Do not pile machines or any other objects on tp of it.
- Do not dismantle for stowing

3. MAINTENANCE

3.1. General Maintenance

- It is recommended to keep the **Combustion chamber** clean, as far as possible, to ensure proper operation and thus prolong the useful life of the insulating material.
- It is recommended to check the status of the thermocouple, the ignition device, the gas valve, the regulator and the non-return valve. If any of these elements suffers any type of deterioration, contact the Nargesa technical service.
- It is required the replacement of the thermocouple, the ignition device, the gas valve, the regulator and the non-return valve every 5 years. It is advisable that the technical service of Nargesa make this substitution.
- It is recommended to check periodically the condition of the isolating material to ensure good insulation of the **Combustion chamber** with the outside of the oven. In case the isolating material is degraded, it can be damaged immediately and irreparable damage will be caused to the metallic enclosure.
- It is recommended to replace the insulating material every 1000 hours of operation.

WARNING:

To proceed with the maintenance of the oven it is necessary to turn off the **Burners** and wait 24 hours to ensure that all the components are at ambient temperature.

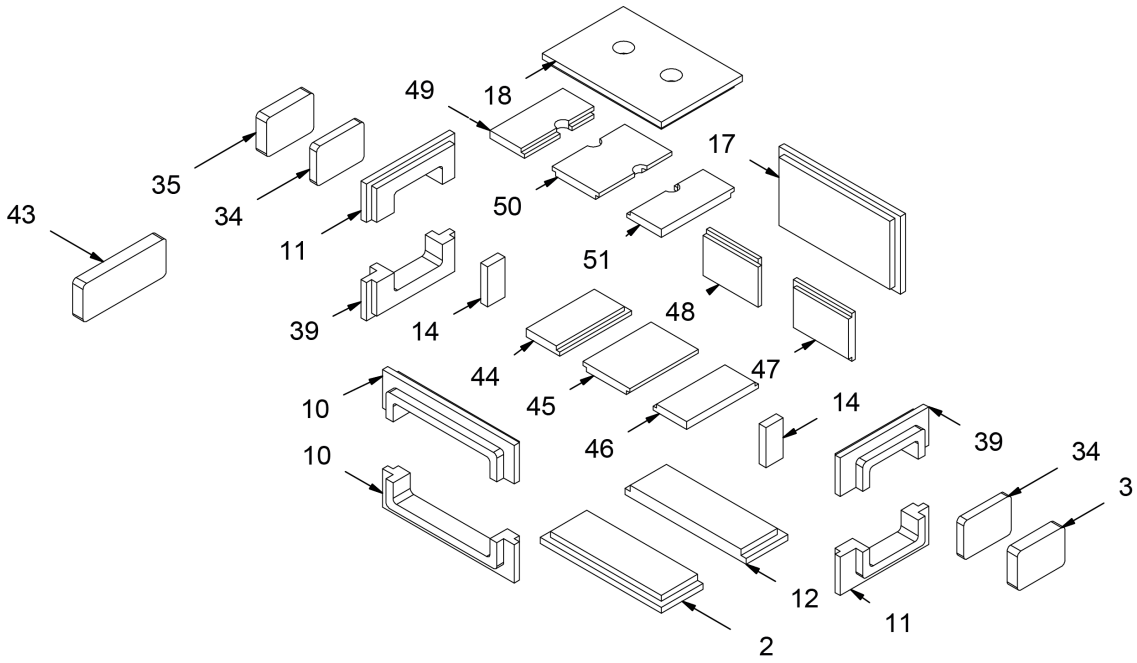

Picture 7. Insolating kit

3.2. Change of the insulating material of the oven

To remove the insulating material from the oven we will follow the following instructions:

WARNING:

To proceed with the change of insulating material it is necessary to turn off the ***Burners*** and wait 24 hours to ensure that the insulating material is at room temperature

1. Disconnect the gas bottle from the oven.

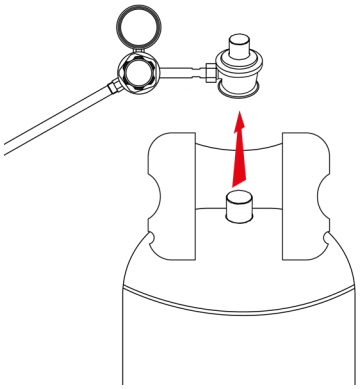

2. Disconnect the **Gas hose** from the **Inlet fitting**

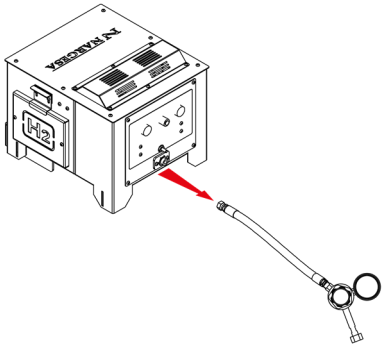

3. Remove the **Upper cover** by unscrewing the six bolts.

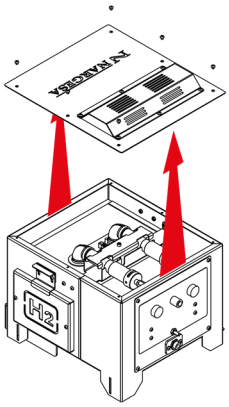

4. Remove the **Upper setting** of the burners

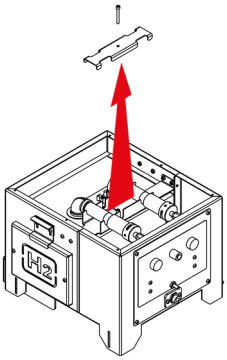

5. Remove the spark plugs by pull away the two bolts

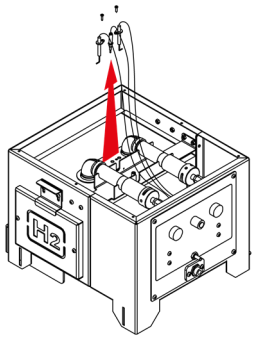

6. Take off the 4 bolts and nuts that hold the **Control Panel**. Remove the **Control panel**, the thermocouple and the spark plugs

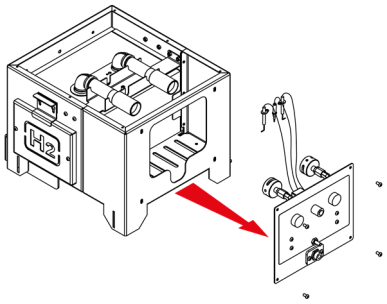

7. Remove the two ***Burners*** and the **Spark plugs holders**

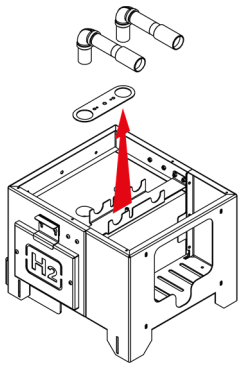

8. Dismantle the **Lower fixing of the burners** by unscrewing the four bolts and the four nuts that hold it.

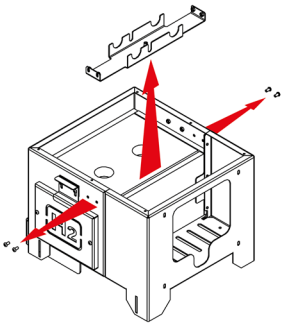

9. Remove the ***Side doors*** following the instructions on Section *5.5*

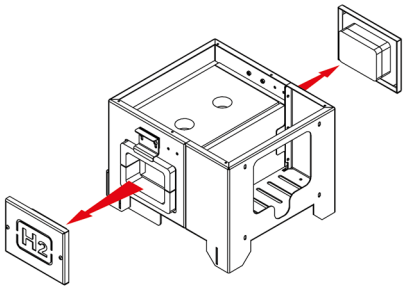

10. Take off the insulation upper plates.

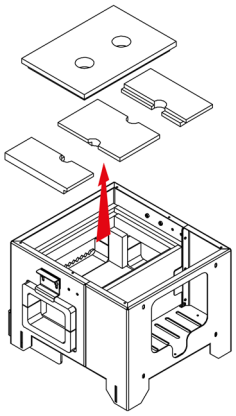

11. Remove the rear insulation panels

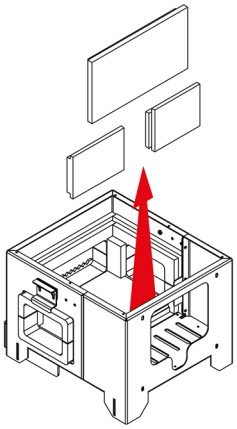

12. Remove the front holders of the upper plate

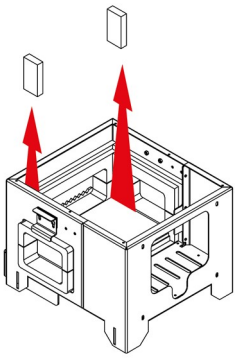

13. Remove the lower insulation

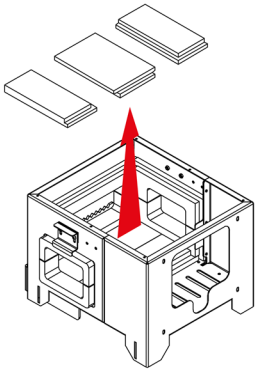

14. Slide the lower insulation towrads the back part of the furnace and remove them by the upper side.

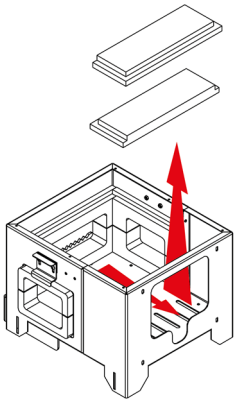

15. Remove the side insulations

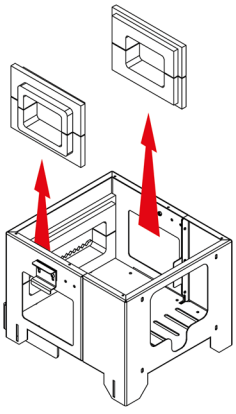

16. Remove the front insulations

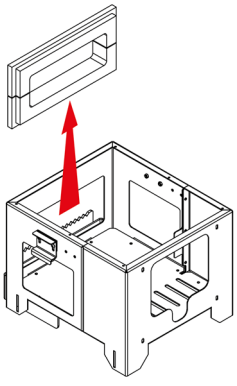

We will use this process in reverse order to do the placement of the insulation:

1. Place the front insulation

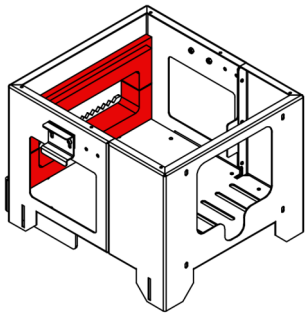

2. Place the side insulation

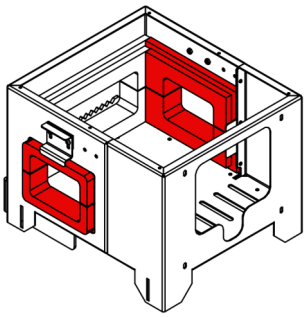

3. Place the lower insulation by the upper/ rear side of the furnace and slide them towards the front part.

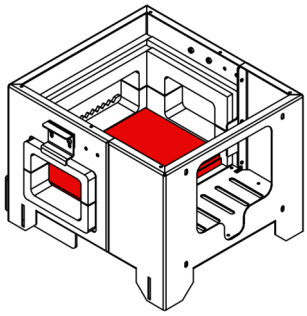

4. Place the front holders of the upper plate

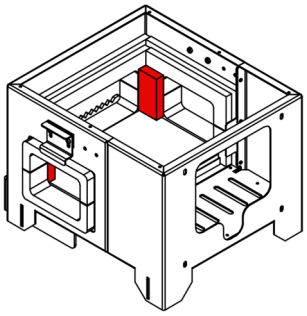

5. Place the rear insulation

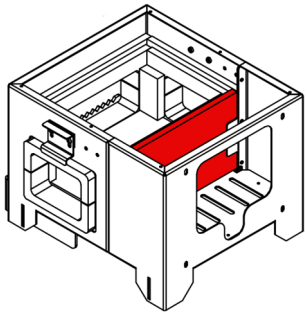

6. Put the insulation upper plates

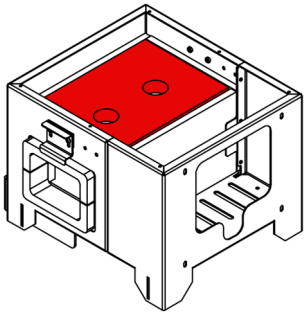

7. Place the ***Side doors.*** Assemble the **Lower fastener of the burners** by tightening the four screws and the four nuts that hold it

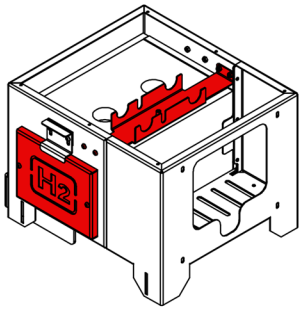

8. Place the **Spark plug holder** and the two **burners** adjusting the **Lower burner fixer** so that the end of the **Burner** is aligned with the lower part of the insulator

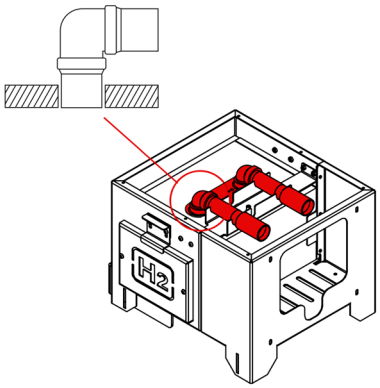

9. Place the **Control panel**, the thermocouple and the spark plugs by fixing the bolts and nuts.

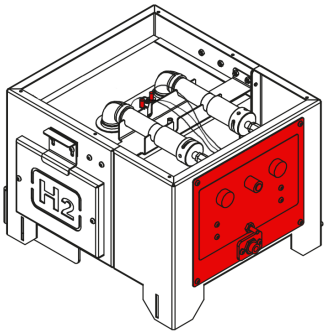

10. Mount the ***Upper fixer of the burners***

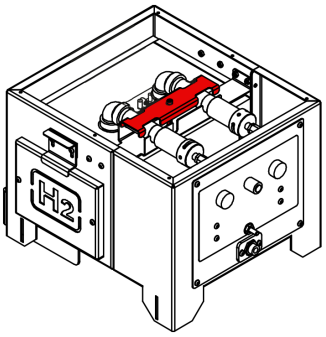

11. Place the ***Upper cover*** by fixing the 6 bolts

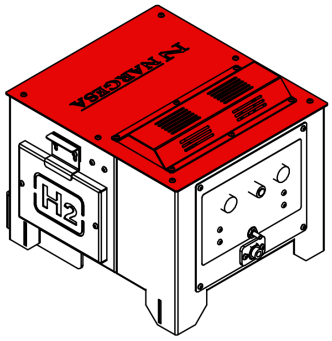

12. Connect the **Gas Hose** to the ***Inlet racor***

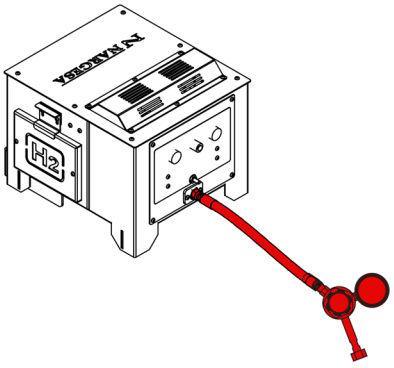

4. HANDLING MANUAL

We have a **Control panel** which will allow us to control the performance of the furnace H2 and which will enable us to maintain complete control of the m¡achine in a simple and intuitive way.

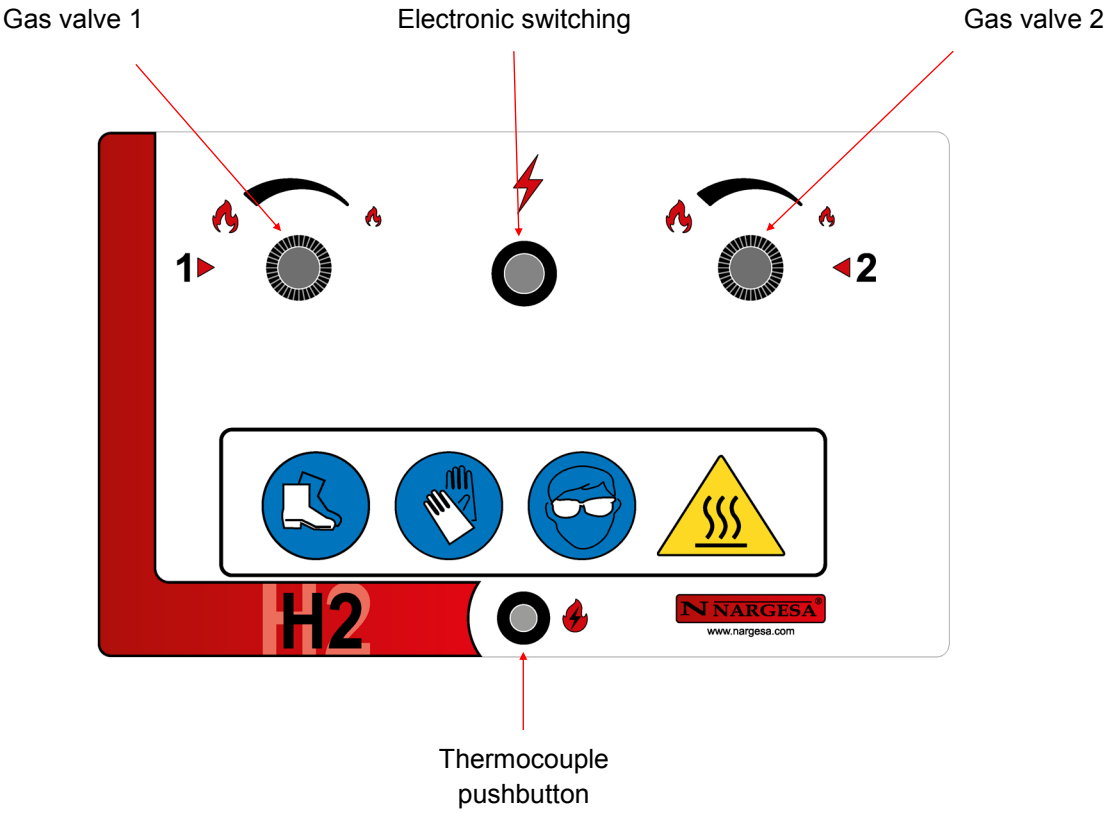

4.1. Gas valve

The ***Control panel*** has got two valve for the opening of the gas entrance to the ***Burners***. These valves are marked with numbers 1 and 2 the operator controls them in order to obtain more on less gas flow.

4.2. Pushbuttons

There are two puhbuttons in the ***Control panel:***

- The pushbutton for ***Electronic switching*** is the one that activates the spark plug and generates the spark to light up the ***Burner.***
- The ***Thermocouple pushbutton*** is the one that opens the valve the get the thermocouple activated. This valve opens the path to the ***Gas valves (1 and 2)***

4.3. Pressure regulator and manometer

The ***Pressure regulator*** allows us to control the working pressure between 0,1 and 1,5 bar, Nargesa suggests to work at a pressure from 0,2 to 1 bar. The ***Manometer*** will indicate the pressure value on the furnace circuit.

5. INSTALLATION AND SET UP

5.1. Machine location

The am is to locate the furnace properly to avoid having to move it; otherwise, the user must follow the guidelines described in the transport section (nº2). It should be placed on a smooth and levelled surface to avoid any movement of it during the positioning of the profiles.

5.2. Dimensions y work area

When the furnace is placed, its dimensions, the safety zone, the work area of the operator and the possible lengths of the workpiece will be taken into account.

Safety zone: We will place the furnace in a zone free of elements and objects, following the indications of the following figure.

The oven will be installed in accordance with the regulations in force and will be used only in sufficiently ventilated places.

The oven can be used by a single operator, which must be work frontally or laterally to the machine to be able to handle the piece safely.

Before starting the heating of the pieces, with the **Burners** off, the operator will adjust the **material support**, adapting it to the material profile and its length, as indicated in section 5.6.

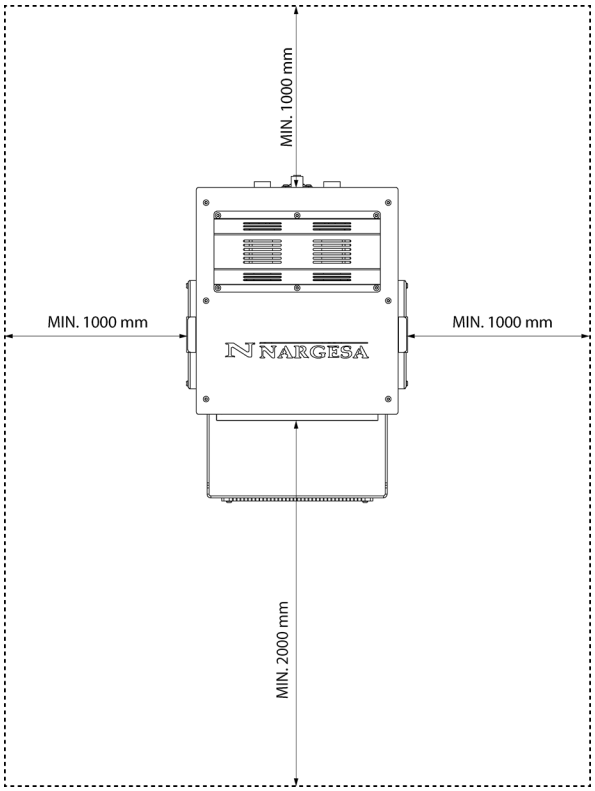

Picture 8. Safety zone

5.3. Admissible outside conditions

- Normal temperatura between +5 and +40ºC without exceeding an average temperature of +35ºC during 24h.
- Relative humidity betwee 30% and 95% without condensation.

5.4. Setting up

Before putting the furnace into operation:

- Inserting the automatic ignition battery.

1. Unscrew the Automatic ignition button (⚡) located on the control panel.

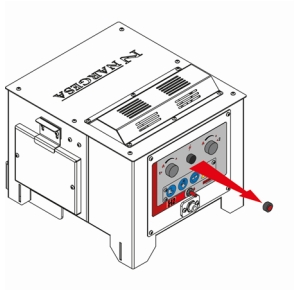

2. Insert the battery into the hole so that its positive end is on the outside.

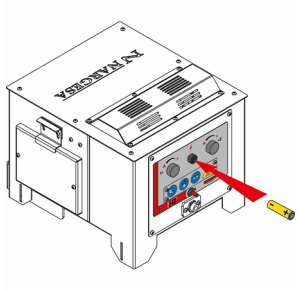

3. Tap tight the Automatic ignition button.

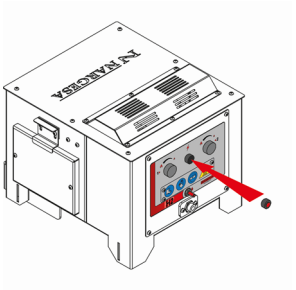

- Connect the **Pressure regulator** to an **Adapter** for the gas cylinder. This adapter is not supplied with the furnace , as this element is different in each country.
- Verify that the maximum gas inlet pressure is less than 25 bars.
- Connect the Adapter to a LPG propane gas cylinder

The **Pressure Regulator** and **Gas Hose** supplied by Nargesa will always be used

5.5. Openings

There are two side openings to work with longer materials.

To remove the **Doors,** move the **Lock up** and pull the **Door** out of position. Leave the Closure in its original position.

To place the ***Side door,*** move the **Latch upwards** and place the **Door** in the lateral opening, press until it stops and lower the **Latch** to its original position.

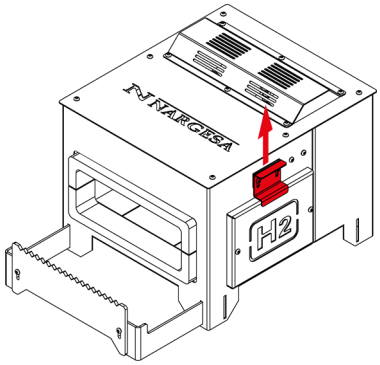

WARNING:

To manipulate the **Side doors** it is necessary to turn off the **Burners** and wait 24 hours to make sure that the insulating material is at room temperature

5.6. Adjustment of the material support position

The oven is equipped with a **Material holder**, this support serves to hold the material while warming up.

The support point of the material can be regulated by moving the support. The point of support must be adjusted according to the length of the material. For material lengths bigger than 800mm, use an external support.

The **Material holder** can be placed in any of the three **Openings**.

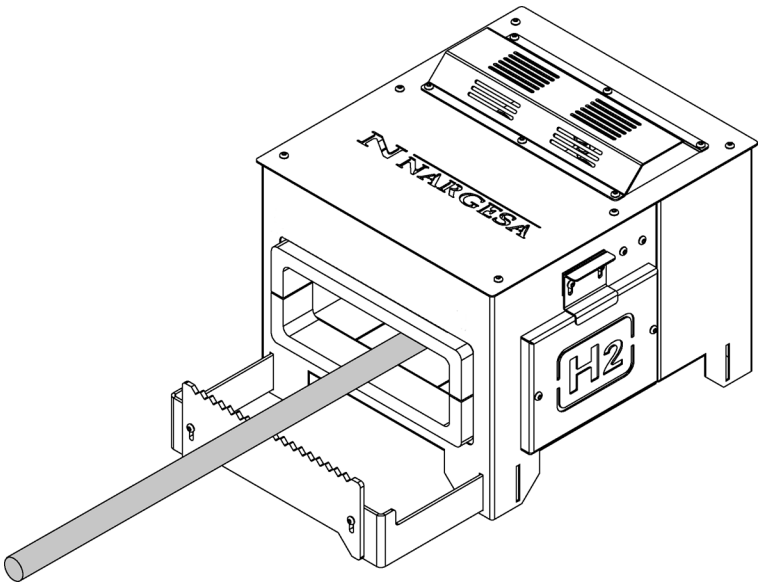

Picture 9. Support of material

5.7. First set up of furnace

For the first start-up of Nargesa gas furnaces, the automatic ignition provided is not used. We will use an external device to light the burner flame. For example a long lighter or a blowtorch.

** **The Adapter (C)** for the gas bottle is not supplied with this furnace, since each country uses different adapters. The Adapter will have to be equipped with a left 21.8 male thread. (L)*

To proceed to the propane furnace ignition we will follow the following steps:

1. Check that the ***Gas Valves (A)*** are completely closed.

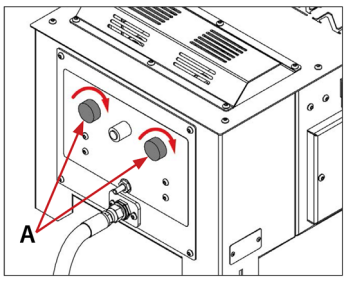

2. Check that the ***combustion chamber (B)*** is cleared off from any element.

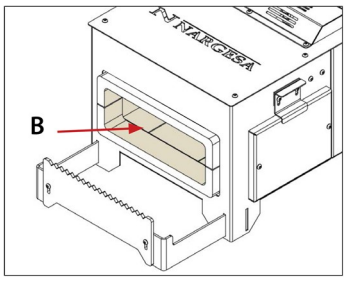

3. Connect the pressure regulator to the ****Adapter (C),*** and this to the gas bottle.

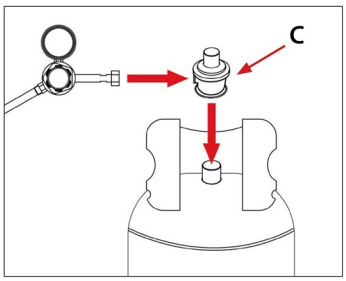

4. Verify that all gas connections between the bottle and the oven are connected correctly and that there are no leaks.

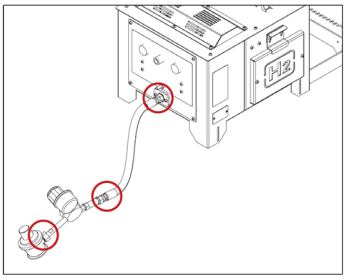

5. Check that the working pressure of the gas is between 0.2 and 0.5 bar.

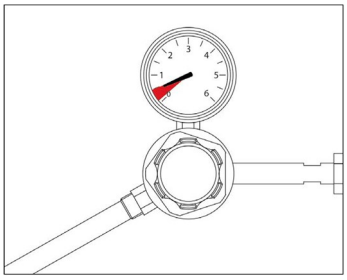

6. Open Gas Valve 1, a few degrees.

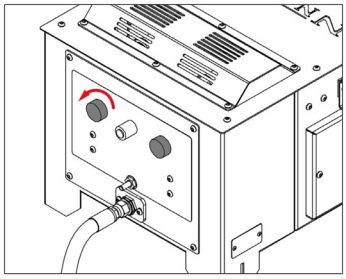

7. Press the ***thermocouple button ( )***

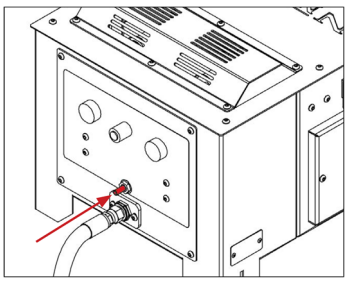

8. Turn on the gas that comes out of the burner. **Important:** never put your hands in the combustion chamber to ignite the gas.

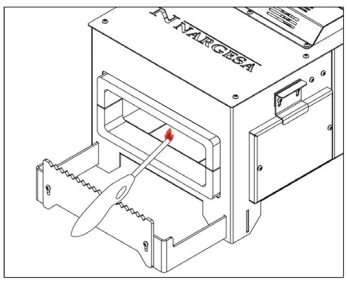

9. When the burner ignites, wait 20 seconds and stop pressing the Thermocouple button.

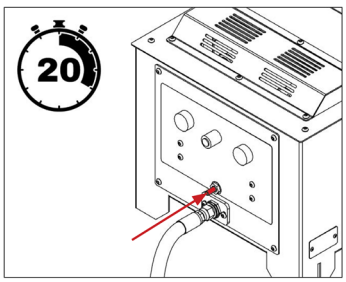

10. Open Gas Valve 1 progressively to the maximum.

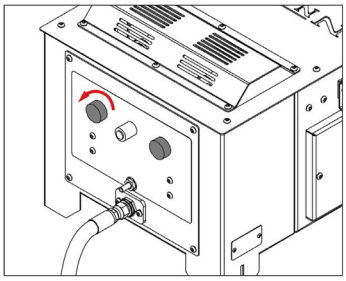

11. Increase the gas pressure progressively up to 1 bar.

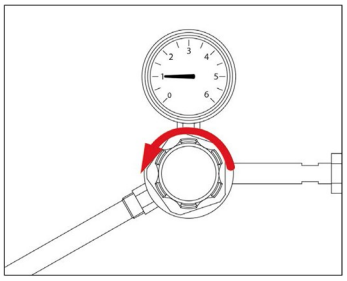

12. Open Gas Valve 2 progressively to the maximum. If the model is H2.

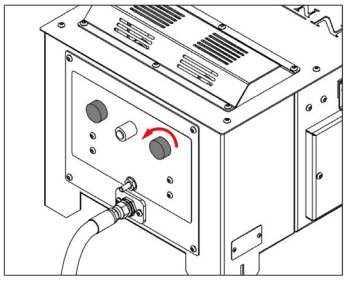

13. After 30 minutes, stop the furnace by closing the gas supply of the Adapter until the flame goes out.

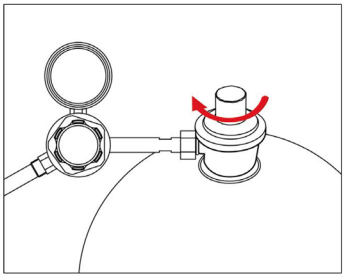

14. Close the gas valves.

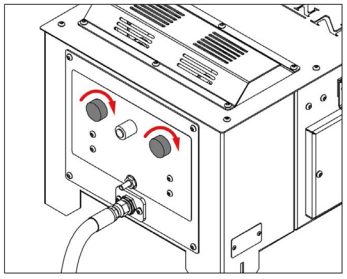

5.7. Lighting up the furnace

To proceed with the ignition of the furnace, we'll follow the steps below:

1. Make sure all gas valves are completely closed.
2. Make sure the **Combustión chamber** is empty and free from any other element.
3. Connect the ***Adaptor*** to the gas bottle.
4. Verify that all gas connections between the bottle and the furnace are correctly connected and the¡at there is no leak.
5. Checkup that the gas work pressure is between 0,1 and 1,5 bars. (Pressure recommended by Nargesa: 0,2 to 1 bar).
6. Open the ***Gas valve 1***, a few degrees.
7. Press the **Thermocouple pushbutton** and the ***Electronic ignition pushbutton***.
8. When the Burner lits up, reléase the **Electronic ignition button.**
9. Wait 20 seconds and reléase the **Thermocouple pushbutton**.
10. Open the ***Gas valve 1*** progressively 'til its limit.
11. Progressively increase the gas pressure up to 1 bar. (Pressure recommended by Nargesa: 1 bar).

If you want to work with both burners, once **Burner 1** is turned on:

1. Press the **electronic ignition button**
2. Open the **gas valve 2** progressively up to the maximum.
3. When the burner is ignited, release the **electronic ignition button**

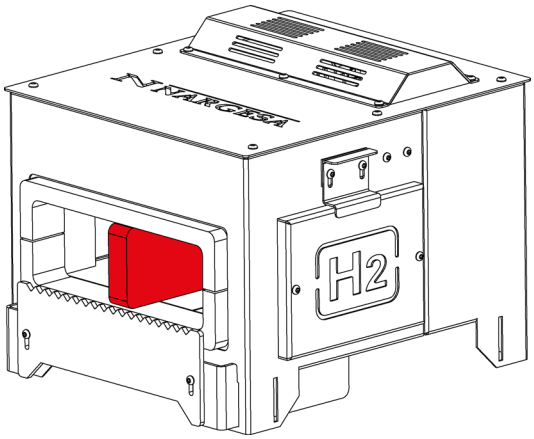

If you want to work with a single burner, it is advisable to place the insulating separator in the middle of the **Combustion chamber**. In this way, the space is divided and the calorific power of the burner is concentrated.

5.8. Shutdown the Furnace

To proceed with the shutdown of the furnace:

1. Turn the **Gas valve 2** clockwise until it is completely closed.
2. Turn the **Gas valve 1** clockwise until it is completely closed.
3. Disconnect the Adapter from the gas bottle.

6. POSSIBLE BREAKDOWNS

BREAKDOWN	CAUSE	SOLUTION
The furnace might not ignite	Unproper gas connections	To connect correctly the gas plug and make sure that the ***Adaptor*** of the gas bottle is properly fit. See section *5.4*
	The ***Manometer*** of the Pressure ***Regulator*** shows 0	Open the ***Pressure regulator*** and the flow of the ***Adaptor*** in the gas bottle
	Gas valve 1 is closed	Open ***Gas Valve 1*** *just some degrees.*
	Gas Valve 1 is way too open	Close a ***Gas Valve 1*** *a few degrees*
Electronic switching does not generate the ignition spark	The spar plug is touching ***Burner 1***	Place the spark pkug 4mm away from the ***Burner 1***
	The spark plug is more tan 4mm away from ***Burner 1***	Place the spark plug 4mm from ***Burner 1***
	Inner battery has been exhausted e ha agotado la pila interior	Change the inner battery (AA, 1,5v)
The flame turns to be turbulent.	Excesss of fuel in the blend of air and gas.	Reduce the amount of fuel by closing gradually the ***Gas Valve 1.***
		Reduce the job pressure
	The gas injector is stuck or dirty	Replace the injector
The flame turns orange	Lack of fuel in the bland of air and fuel.	Increase the amount of fuel by opening the ***Gas Valve 1*** gradually.
	The gas injector is stuck or dirty	Replace the injector
	The air inlet is dirty	Clean up the furnace air inlet.
The flame goes out of the combustion chamber	Excessive gas pressure	Reduce the gas pressure

If the problem goes on, please contact our technical assistance in Nargesa

+34 972568085 +34 620446827 sat2@nargesa.com sat2.nargesa

7. WARNINGS

The H2 furnace is designed so that the operator can adjust the machine and heat the necessary parts with total safety. Any modification of the machine will alter the security that it offers, breaching the certificate of conformity and being able to generate irreparable personal and material damages. Carefully read the **Warning label** on the left side of the furnace.

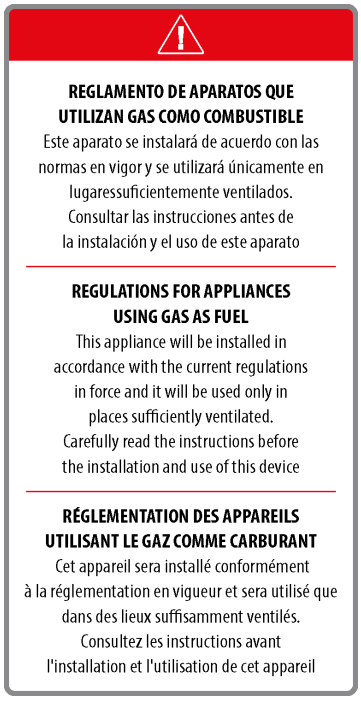

7.1. Waste hazards

During the heating of materials some danger situations might occur, which need to be analyzed and prevented.

- Be carefull while introducing and removing material in the machine, in order to prevent any burnt or injury.
- Firmly hold the piece to be inserted or removed to avoid unwanted movements due to the weight of the piece.
- Hold the material by the cold end, never by the hot zone
- Maintain a safe distance between the machine and the operator

7.2. Protection elements for the operator

Like elemnts of personal protection, it is mandatory:

- Utilizar gafas y botas de protección homologadas
- To wear thermal gloves for handling the machine and all along the heating processes.
- To wear homologated and approved protective googles and shoes.

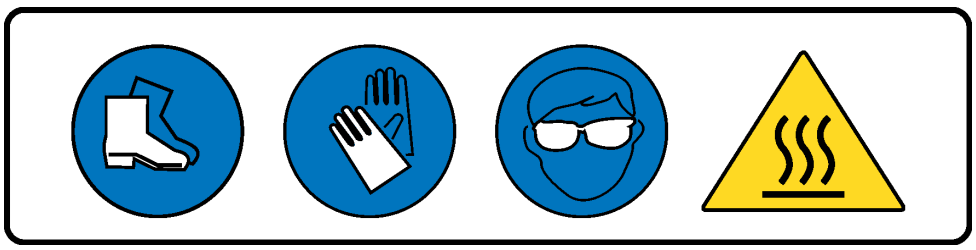

Tecnichal Annex

Furnace H2

List of parts

Gas layout

List of parts

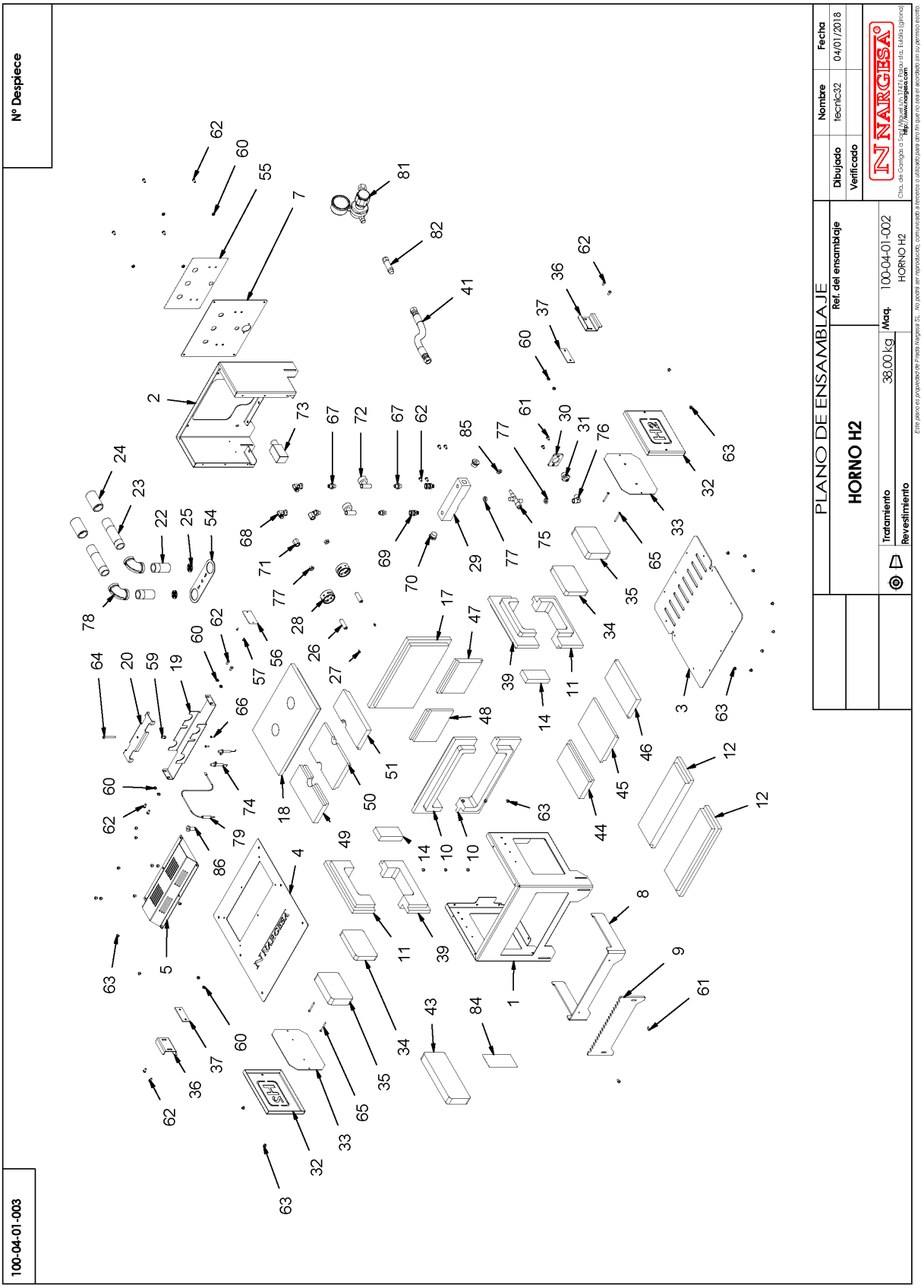

Nº ORDEN	DIBUJO	DESCRIPCION	Nº PLANO	PIEZAS POR MAQUINA
1		FRONTAL	120-04-01-00155	1
2		POSTERIOR	120-04-01-00102	1
3		BASE	120-04-01-00103	1
4		TAPA SUPERIOR	120-04-01-00104	1
5		CAPOTA	130-04-01-00001	1
7		TAPA REGULACION	120-04-01-00107	1
8		SOSTEN MATERIAL	120-04-01-00108	1
9		FRONTAL SOSTEN	120-04-01-00109	1
10		AISLANTE FRONTAL 30	120-04-01-00110	2
11		AISLANTE LATERAL 1 30	120-04-01-00111	2
12		AISLANTE INFERIOR 30	120-04-01-00112	2
14		AISLANTE LATERAL 20	120-04-01-00114	2
17		AISLANTE POSTERIOR 30	120-04-01-00117	1
18		AISLANTE SUPERIOR 30	120-04-01-00118	1
19		SOPORTE SUPERIOR	120-04-01-00119	1
20		TAPA SUPERIOR QUEMADORES	120-04-01-00120	1
22		TOBERA QUEMADOR	120-04-01-00122	2
23		TOBERA LARGA QUEMADOR	120-04-01-00123	2

Nº ORDEN	DIBUJO	DESCRIPCION	Nº PLANO	PIEZAS POR MAQUINA
24		TOBERA VENTURI	120-04-01-00124	2
25		DIFUSOR	120-04-01-00125	2
26		SOPORTE INYECTOR	120-04-01-00126	2
27		INYECTOR	120-04-01-00127	2
28		REGULADOR CAUDAL AIRE	120-04-01-00128	2
29		COLECTOR GAS	120-04-01-00129	1
30		ANTIROTACION ENTRADA GAS	120-04-01-00130	1
31		RACOR REDUCIDO 1/2-1/4 MACHO MACHO	040-RRMM-00003	1
32		PUERTA LATERAL	120-04-01-00132	2
33		CUBRE CHAPA PUERTA LATERAL	120-04-01-00133	2
34		AISLANTE PUERTA LATERAL 20	120-04-01-00134	2
35		AISLANTE PUERTA LATERAL 30	120-04-01-00135	2
36		FIJACION PUERTA LATERAL	120-04-01-00136	2
37		SEPARADOR FIJACION PUERTA	120-04-01-00137	2
39		AISLANTE LATERAL 2 30	120-04-01-00139	2
41		MANGUERA GAS METALICA	120-04-01-00141	1
43		AISLANTE CENTRAL	120-04-01-00143	1
44		AISLANTE INFERIOR 20 1	120-04-01-00144	1

Nº ORDEN	DIBUJO	DESCRIPCION	Nº PLANO	PIEZAS POR MAQUINA
45		AISLANTE INFERIOR 20 2	120-04-01-00145	1
46		AISLANTE INFERIOR 20 3	120-04-01-00146	1
47		AISLANTE POSTERIOR 20 1	120-04-01-00147	1
48		AISLANTE POSTERIOR 20 2	120-04-01-00148	1
49		AISLANTE SUPERIOR 20 1	120-04-01-00149	1
50		AISLANTE SUPERIOR 20 2	120-04-01-00150	1
51		AISLANTE SUPERIOR 20 3	120-04-01-00151	1
54		SOPORTE BUGIAS	120-04-01-00156	1
55		CALCA H2	122-04-01-001	1
56		PLACA CARACTERISTICAS	122-04-01-002	1
57		REMACHE DE CLAVO DIN 7337 De Al Ø3x8	020-D7337-3X8	2
59		TUERCA REMACHABLE RANURADA M6	020-D9316Z-M6	1
60		TUERCA DIN 934 M6	020-D934-M6	12
61		TORNILLO ISO 7380 M6X10	020-I7380-M6X10	4
62		TORNILLO ISO 7380 M6X12	020-I7380-M6X12	16
63		TORNILLO ISO 7380 M6X6	020-I7380-M6X6	34
64		TORNILLO ISO 7380 M6X50	020-I7380-M6X50	1
65		TORNILLO DIN 7505 Ø4x40 CABEZA AVELLANADA PHILIPS	020-D7505-4X40	4

Nº ORDEN	DIBUJO	DESCRIPCION	Nº PLANO	PIEZAS POR MAQUINA
66		TORNILLO DIN 7981 Ø3.5X16 CABEZA ALOMADA PHILIPS	020-D7981-3C5X16	2
67		RACOR 1/4" MACHO MACHO	040-RMM-00002	4
68		CODO 90º MACHO HEMBRA TL 1/4"	040-CMH-00003	2
69		RACOR GIRATORIO MACHO HEMBRA 1/4"	040-RG-00002	2
70		TAPON ALLEN 1/2"	040-TVA-00001	2
71		SUPLEMENTO HEMBRA FIJO 1/4"	040-SHF-00002	2
72		VALVULA AGUJA H-H 1/4	041-GAS-00001	2
73		ENCENDIDO ELECTRONICO H1-H2	041-GAS-00002	1
74		BUJIA DE ENCENDIDO	041-GAS-00003	2
75		VALVULA SEGURIDAD TERMOPAR M-M 1/4	041-GAS-00004	1
76		CODO H-H 1/4	041-GAS-00005	1
77		TUERCA ESTRECHA 1/4"	041-GAS-00006	4
78		CODO 90º INOX 316 H-H 1"	041-GAS-00007	2
79		TERMOPAR	041-GAS-00008	1
80		CABLE ENCENDIDO	041-GAS-00009	2
81		REGULADOR DE PROPANO	041-GAS-00010	1
82		VALVULA ANTIRRETORNO DE PROPANO	041-GAS-00011	1
84		CALCA ADVERTENCIAS HORNO	122-04-01-003	1

Nº ORDEN	DIBUJO	DESCRIPCION	Nº PLANO	PIEZAS POR MAQUINA
85		TUERCA SOPORTE TERMOPAR	041-GAS-00014	1
86		SEPARADOR TERMOPAR	120-04-01-00157	1

Gas layout

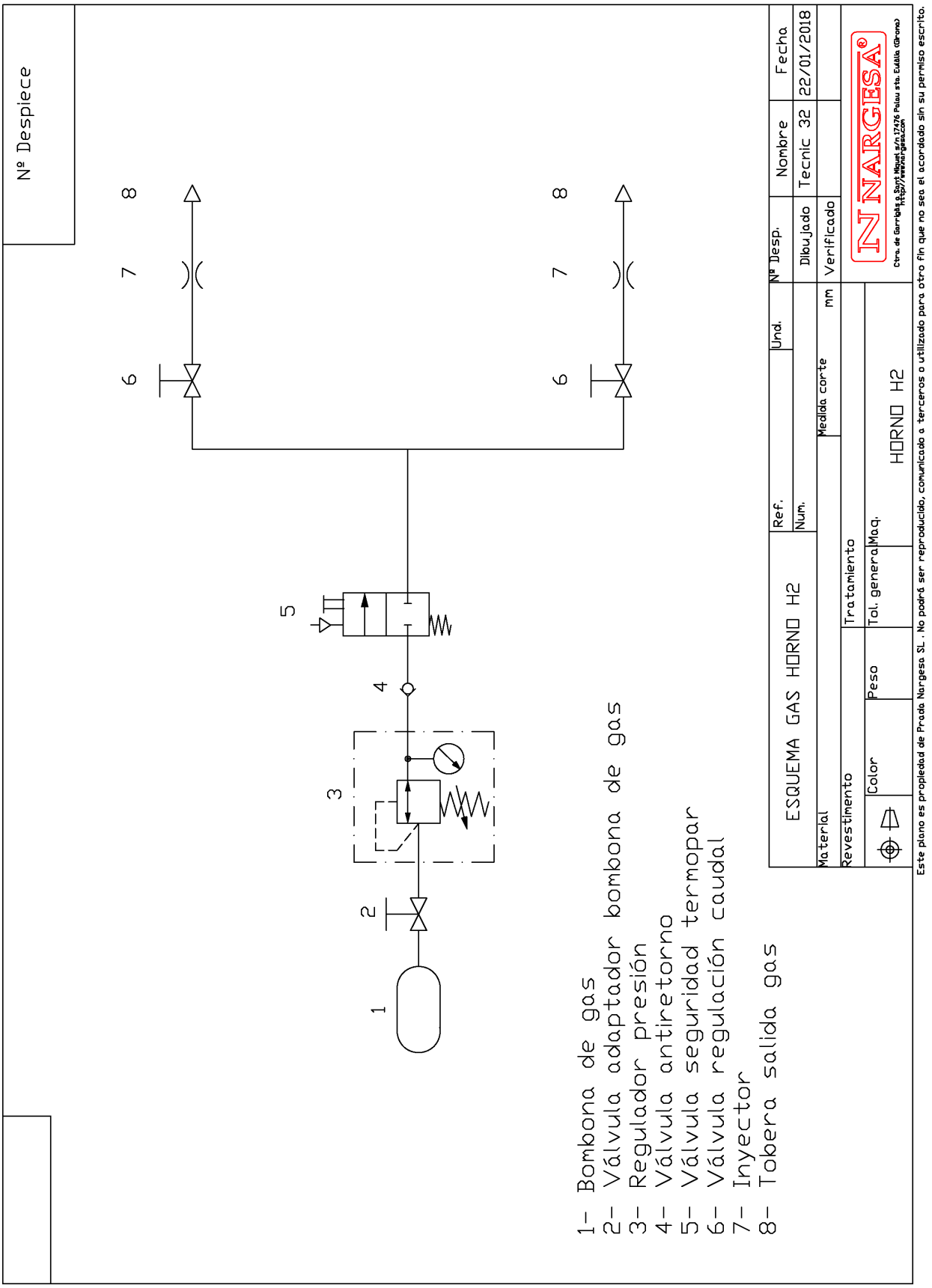
Nº Despiece
1- Bombona de gas
2- Válvula adaptador bombona de gas
3- Regulador presión
4- Válvula antiretorno
5- Válvula seguridad termopar
6- Válvula regulación caudal
7- Inyector
8- Tobera salida gas
ESQUEMA GAS HORNO H2
HORNO H2
NARGESA
Tecnic 32
22/01/2018
Este plano es propiedad de Prado Nargesa SL. No podrá ser reproducido, comunicado a terceros o utilizado para otro fin que no sea el acordado sin su permiso escrito.

WARRANTY REGISTRATION

1. Among www.nargesa.com on our site

2. Select the menu Warranty Registration

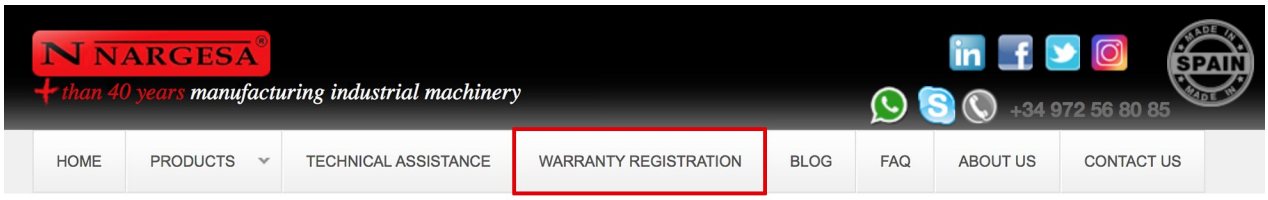

3. Complete the form with your details and press
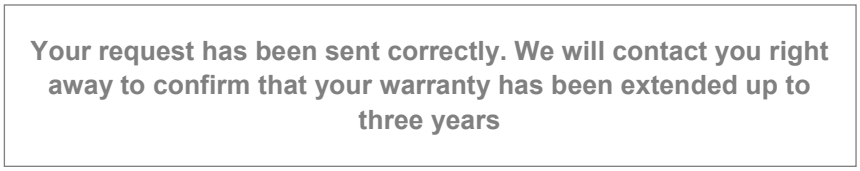
4. Message Sent: confirms your data has been successfully sent to Prada Nargesa SL. Your machine has been registered and has a warranty of three years in total.